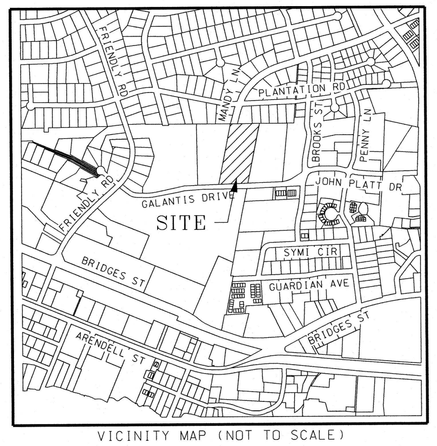

VICINITY MAP (NOT TO SCALE)

SITE DATA	
TOTAL AREA IN TRACT	5.577 ACRES
CURRENT ZONE	O & P
REQUIRED PARKING	
ASSISTED LIVING FACILITY	
1 SPACE PER 3 BEDROOMS	31 (92 BEDROOMS)
1 SPACE PER 2 EMPLOYEES	22 (44 EMPLOYEES)
TOTAL REQUIRED SPACES	53 SPACES
PROPOSED PARKING	
REGULAR SPACES	74 SPACES
HANDICAP SPACES	4 SPACES
TOTAL SPACES PROVIDED	78 SPACES
IMPERVIOUS AREA	
BUILDING	73.800 SF
SIDEWALK	10.807 SF
PARKING	48.243 SF
UNASSIGNED	443 SF
TOTAL	133.293 SF

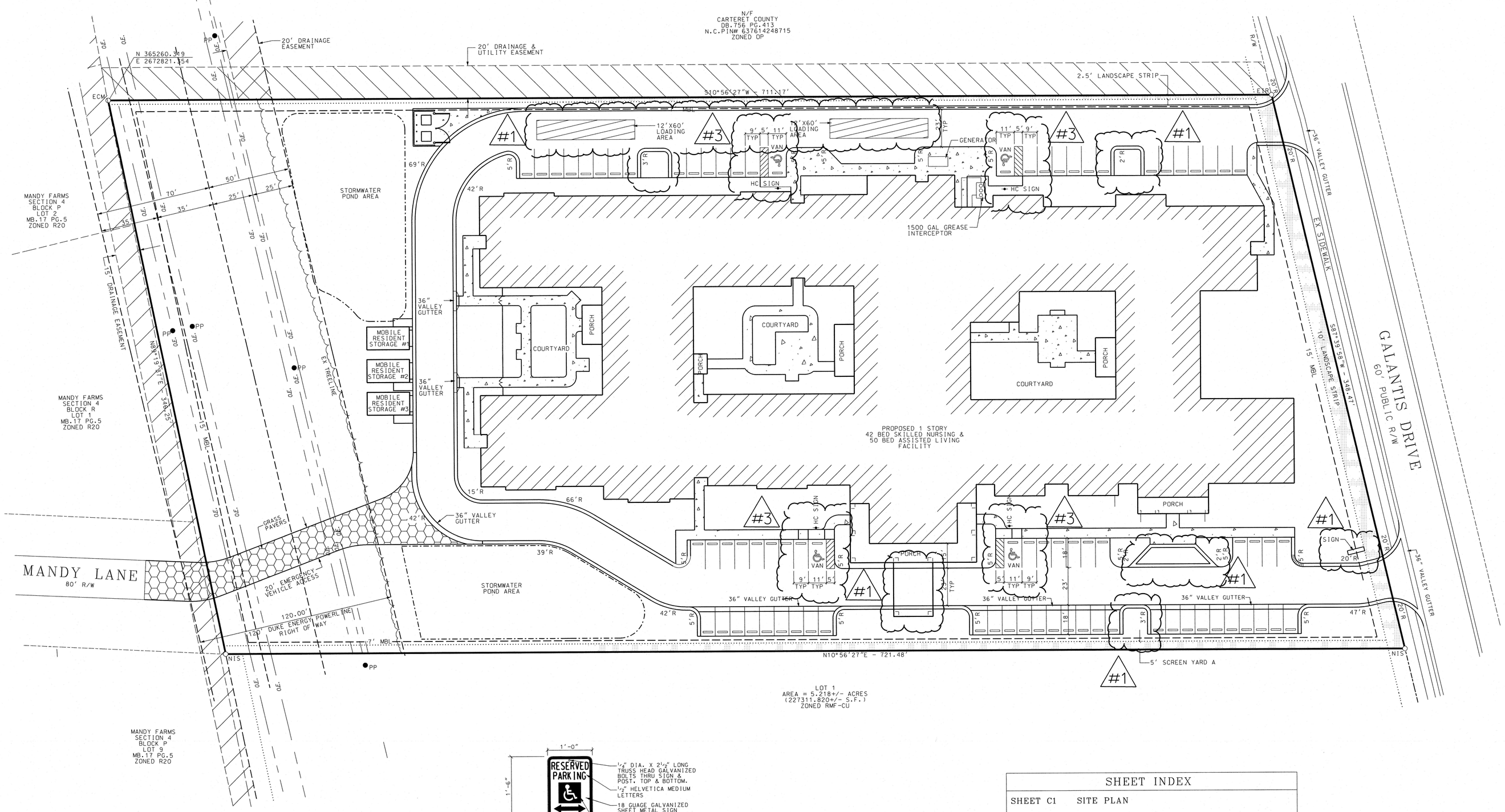

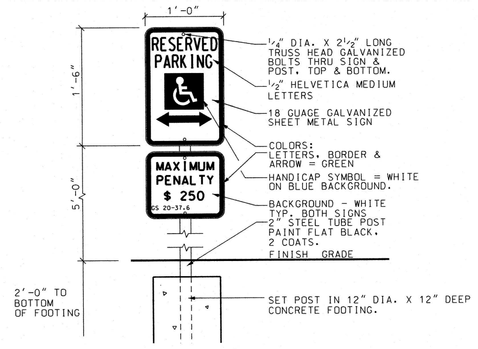

HANDICAP SIGN DETAIL 1/C1
SCALE:NTS

SHEET INDEX	
SHEET C1	SITE PLAN
SHEET C2A	GENERAL GRADING, DRAINAGE, EROSION & SEDIMENTATION CONTROL, & STORMWATER MANAGEMENT PLAN
SHEET C2B	EROSION CONTROL TEMPORARY DIVERSION PLAN
SHEET C3	UTILITY PLAN
SHEET C4	DRAINAGE DETAILS
SHEET C5	SITE WORK DETAILS
SHEET C6	ECP DETAILS
SHEET C7	WET DETENTION POND #1 DETAILS
SHEET C8	WET DETENTION POND #2 DETAILS

ARCHITECTURAL CONCEPTS INC
2401 WEST FAY DRIVE SUITE 303 LAKELAND, FL 33770

NORTH CAROLINA PROFESSIONAL ENGINEER # PE 5279 LINWOOD E. STROUD
10/25/22
LINWOOD E. STROUD, P.E.

STROUD ENGINEERING, P.A.
107-B COMMERCE STREET
GREENVILLE, NORTH CAROLINA 27858
(252) 756-9352
LICENSE NO.C-0647

TO THE BEST OF THE ENGINEER'S KNOWLEDGE, THE PLANS AND SPECIFICATIONS COMPLY WITH THE APPLICABLE MINIMUM BUILDING CODES AND THE APPLICABLE FIRE-SAFETY STANDARDS AS DETERMINED BY THE LOCAL AUTHORITY IN ACCORDANCE WITH THIS SECTION.

PROPOSED:

THE EMBASSY AT MOREHEAD CITY

A NEW SKILLED NURSING, MEMORY CARE, & ASSISTED LIVING FACILITY

3822 GALANTIS DRIVE
MOREHEAD CITY, NC 28557

DO NOT SCALE PRINTS

THE DOCUMENTS AND THE INFORMATION CONTAINED HEREIN ARE THE SOLE PROPERTY OF ARCHITECTURAL CONCEPTS INC. UNAUTHORIZED REPRODUCTION AND/OR REUSE MAY BE PROSECUTED IN ACCORDANCE WITH THE APPROPRIATE COPYRIGHT AND PATENT LAWS.

PUBLICATION	DATE
CONCEPT:	XX-XX-XX
SCHEMATIC DESIGN:	07-16-21
PRELIMINARY DESIGN:	07-01-21
DESIGN DEVELOPMENT:	09-01-21
PERMIT SET:	03-25-22
BID SET:	10-15-21
FOR CONSTRUCTION:	XX-XX-XX

REVISIONS:

REV. #	DATE	REVISION TITLE
#1	06-08-22	TOWN OF MOREHEAD CITY SITE PLAN REVISIONS
#2	07-11-22	COORDINATION/VE CHANGES & NCDHHS COMMENTS
#3	10-11-22	NCDOI-FIRE MARSHAL COMMENTS
	10-25-22	REVISE SITE DATA

PLOT DATE: 9/14/21

FILE LOCATION:

SHEET DESCRIPTION:

SITE PLAN

PROJECT NO. 1902

SCALE: 1"=30'

DRAWING NO.

C1 OF 8

Pipe Schedule

Pipe No.	Size (in.)	Length (ft.)	Grade (%)	Invert El. (ft.) In	Invert El. (ft.) Out
1	12	136	0.30%	14.81	14.40
2	18	64	0.30%	14.15	13.96
3A	12	52	0.30%	14.97	14.81
3B	15	72	0.30%	14.56	14.34
3C	18	52	0.30%	14.12	13.96
4	24	208	0.30%	13.71	13.09
5	24	22	0.30%	13.09	13.02
6A	12	56	0.30%	13.95	13.78
6B	12	36	0.30%	13.89	13.78
6C	15	28	0.30%	13.61	13.58
7	30	8	0.10%	13.02	13.01
8A&B	24	140	0.10%	12.14	12.00
9	12	16	0.30%	14.39	14.34
10	12	28	0.30%	14.42	14.34
11	18	128	0.30%	14.09	13.71
12	18	52	0.33%	13.71	13.54
13	18	24	0.30%	13.74	13.67
14	18	42	0.30%	13.67	13.54
15	15	276	0.30%	14.71	13.88
16	18	44	0.20%	13.63	13.54
17	24	20	0.10%	13.14	13.12
18	24	84	0.10%	13.12	13.04
19	30	24	0.10%	12.54	12.51
20	30	8	0.10%	12.51	12.5
21A	24	36	0.10%	12.3	12.26
21B	24	44	0.10%	12.3	12.26

Inlet Schedule

Inlet No.	Top of Hood	Top of Grate	Pipe Inverts North	Pipe Inverts South	Pipe Inverts East	Pipe Inverts West
DI 1	N/A	17.5	14.81	N/A	N/A	N/A
DI 2	N/A	19.00	N/A	N/A	N/A	15.05
DI 3	N/A	19.00	N/A	N/A	14.89	14.64
DI 4	N/A	18.00	N/A	N/A	14.34	14.09
DI 5	N/A	16.70	13.71	13.96	13.96	N/A
DI 6	N/A	17.50	13.95	N/A	N/A	N/A
DI 7	N/A	15.00	N/A	13.89	N/A	N/A
DI 8	N/A	15.80	N/A	13.89	N/A	N/A
DI 9	N/A	19.00	N/A	N/A	N/A	14.39
DI 10	N/A	19.00	N/A	N/A	14.34	14.34
DI 11	N/A	19.00	N/A	N/A	14.39	N/A
DI 12	N/A	19.00	13.71	13.71	N/A	N/A
CB 1	19.96	19.54	14.15	14.4	N/A	N/A
CB 2	16.37	15.95	13.09	13.09	N/A	N/A
CB 3	16.28	15.86	13.78	13.78	N/A	13.95
CB 4	18.12	17.7	14.71	N/A	N/A	N/A
CB 5	17.28	16.86	N/A	13.88	N/A	13.63
CB 6	17.93	16.33	12.54	13.54	13.03	N/A
CB 7	16.75	16.33	12.51	12.51	N/A	N/A
SDMH 1	N/A	16.69	N/A	13.29	N/A	13.29

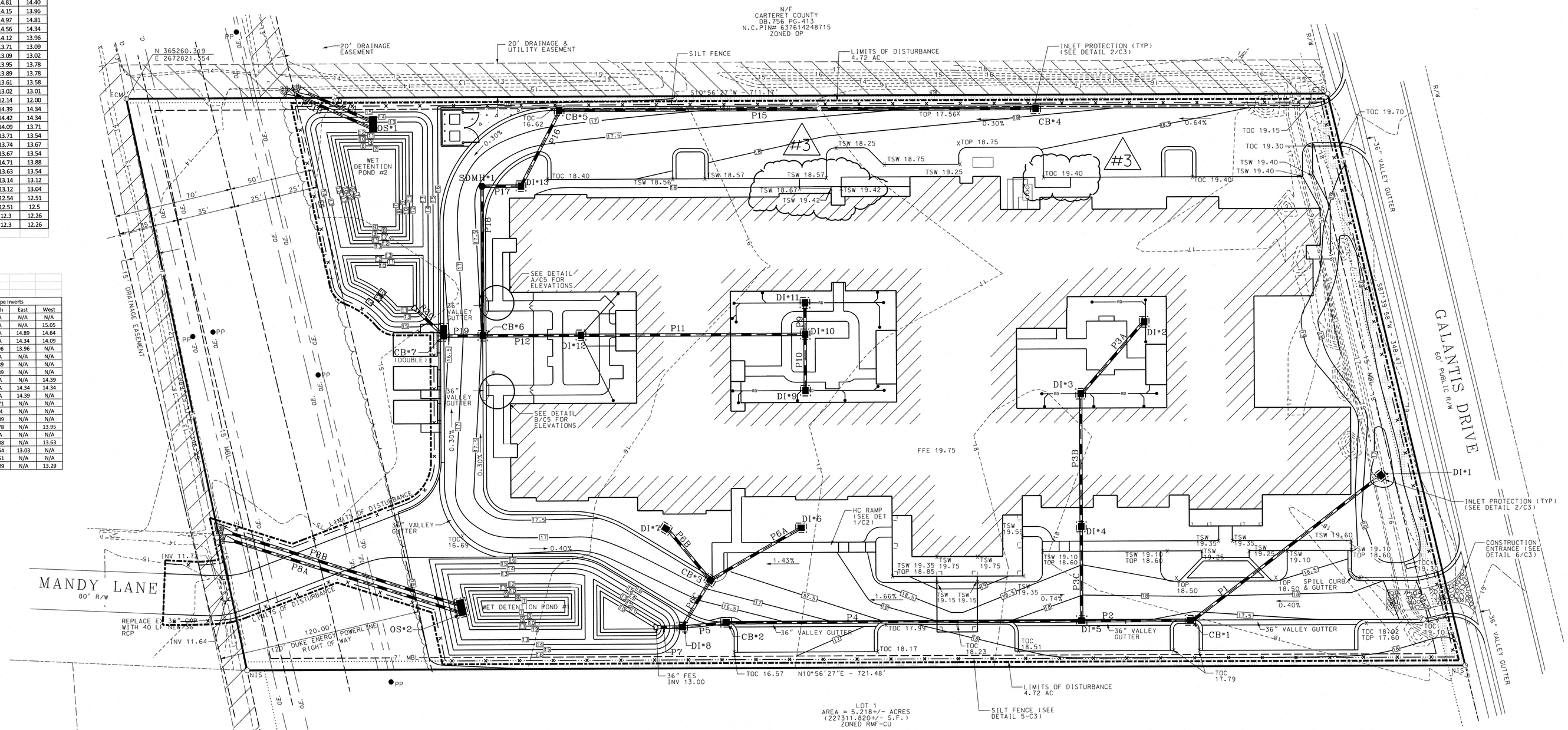

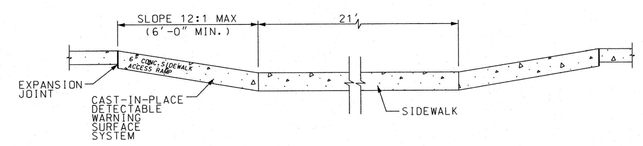

GENERAL NOTES:

1. ENGINEER MAY SPECIFY LOCATION. RAMP TO ALIGN WITH EXISTING OR PROPOSED WALKS.
2. GRADE CHANGES FROM SIDEWALK TO RAMP TO BE A MAXIMUM OF 12:1. DISTANCE TO BE GOVERNED BY GRADE.

HC RAMP SECTION 1 / C2A
SCALE: NTS

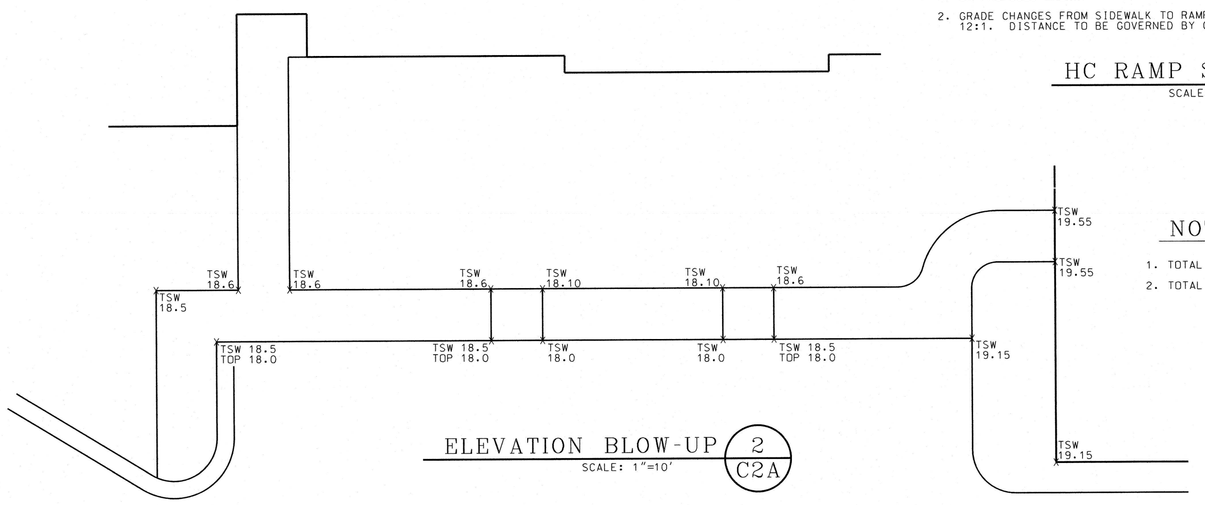

ELEVATION BLOW-UP 2 / C2A
SCALE: 1"=10'

NOTES

1. TOTAL DISTURBED AREA IS 4.79 AC.
2. TOTAL NON-CONNECTED WETLAND IMPACT AREA IS 0.98 AC.

Maintenance Plan

1. All erosion and sediment control measures shall be checked for stability and effective operations following every runoff producing rainfall event or at least once per week. Repairs required shall be completed immediately to the dimension and functions indicated on the plan.
2. Sediment shall be removed form behind the sediment fencing when it becomes 0.5 feet deep at the fence. The fence shall be replaced or repaired as necessary to maintain a barrier.
3. All seeded areas shall be fertilized, seeded and mulched within 7 days of disturbance. Disturbed areas shall be fertilized, reseeded and mulched as necessary according to the Contract documents to establish and maintain a dense vegetative cover.

Construction Sequence

1. Install gravel construction entrance(s) & silt fencing at specified locations.
2. Complete clearing & grubbing operations.
3. Excavate, rough grade, and temporarily seed stormwater detention basin.
4. Rough grade parking area, install drop inlets and storm drain piping including sedimentation control measures.
5. Seed and mulch all areas of disturbance not to be paved within 14 days of land disturbance.
6. Begin preparation of building site.
7. Install utilities.
8. Fine grade drive and parking area and place stone base course.
9. Construct building.
10. Pave drive and parking area.
11. Perform final grading, seed and mulch all remaining disturbed areas.
12. Once the site is stabilized remove accumulated sediment and skimmer from stormwater detention basin. install new 6" screw cap drilled with 1.5" orifice to the orifice outlet. perform final grading of basin and remove any accumulated sediment.
13. Install wet detention basin vegetation as specified on wet detention details and vegetation plan.
14. Remove temporary erosion control measures.

LEGEND

TOC	FINISH TOP OF CURB ELEVATION
TSW	FINISH TOP OF SIDEWALK ELEVATION
FES	FLARED END SECTION
CB	CATCH BASIN
DI	DROP INLET
OS	OUTLET STRUCTURE
	EXISTING CONTOUR
	PROPOSED CONTOUR
	ROOF DRAIN
	STORM DRAIN
	DRAINAGE AREA LINE
	LIMITS OF DISTURBANCE
	SILT FENCE

SEEDING SCHEDULE

SEED BED PREPARATION

LIME---------- 2 TONS/AC
10-10-10 ---------- 1,000 LBS/AC
SURFACE ROUGHENING: IF RECENT TILLAGE OPERATIONS HAVE RESULTED IN A LOOSE SURFACE, ADDITIONAL ROUGHENING MAY NOT BE REQUIRED EXCEPT TO BREAK UP LARGE CLODS. IF RAINFALL CAUSES THE SURFACE TO BECOME SEALED OR CRUSTED, LOOSEN IT JUST PRIOR TO SEEDING BY DISKING, RAKING OR HARROWING. GROOVE ON FURROW SLOPES STEEPER THAN 3:1 ON THE CONTOUR BEFORE SEEDING.

TEMPORARY SEEDING MIXTURE

(DECEMBER 1 -APRIL 15)
RYE (GRAIN)---------- 120 LBS/AC
KOBE LESPEDEZA (SCARIFIED)---50 LBS/AC
(OMIT ANNUAL LESPEDEZA WHEN DURATION OF TEMPORARY COVER IS NOT TO EXTEND BEYOND JUNE)

(APRIL 15 -AUGUST 15)
GERMAN MILLET---------- 40 LBS/AC

(AUGUST 15- DECEMBER 30)
RYE (GRAIN)---------- 25 LBS/AC
(IF IT IS NECESSARY TO EXTEND TEMPORARY COVER BEYOND JUNE 15, OVERSEED WITH 50LB/AC KOBE.)

PERMANENT SEEDING MIXTURE

TALL FESCUE---------- 60 LBS/AC
PENSACOLA BAHIAGRASS---------- 50 LBS/AC
SERICEA LESPEDEZA---------- 30 LBS/AC
KOBE LESPEDEZA---------- 10 LBS/AC

1. FROM SEPTEMBER 1 - MARCH 1, USE UNSCARIFIED SERICEA SEED
2. ON POORLY DRAINED SITES OMIT SERICEA AND INCREASE KOBE TO 30 LBS/AC
3. WHERE A NEAT APPEARANCE IS DESIRED, OMIT SERICEA AND INCREASE KOBE TO 40 LBS/AC.
4. BETWEEN APRIL 15 AND AUGUST 15, ADD 10 LB/AC GERMAN MILLET OR 15 LB/AC SUDANGRASS. PRIOR TO MAY 1 OR AFTER AUG 15, ADD 25 LB/AC RYE (GRAIN).

PERMANENT SEEDING MIXTURE (SWALES & DITCHES)

COMMON BERMUDAGRASS---------- 80 LBS/AC

MULCHING

STRAW:WHEAT, OATS, BARLEY,RYE)------ 1-2 TONS/AC (AFTER SEEDING)
(STRAW QUALITY SHALL BE DRY, UNCHOPPED & UNWEATHERED)
ASPHALT TACK----------200 GAL./TON OF MULCH

1. APPLY 4000 LB/AC STRAW. ANCHOR STRAW BY TACKING WITH ASPHALT, NETTING,OR A MULCH ANCHORING TOOL. A DISK WITH BLADES SET NEARLY STRAIGHT CAN BE USED AS A MULCH ANCHORING TOOL.
2. A CHANNEL LINING MATERIAL (SEE DETAIL BELOW) SHALL COVER THE BOTTOM OF SWALES & DITCHES. THE LINING SHALL EXTEND ABOVE THE HIGHEST DEPTH OF FLOW WITHIN GIVEN CHANNEL. ON CHANNEL SIDE SLOPES ABOVE THIS HEIGHT APPLY STRAW AS PREVIOUSLY INSTRUCTED.

MAINTENANCE

IF GROWTH IS LESS THAN FULLY ADEQUATE, REFERTILIZE IN THE SECOND YEAR WITH 500 LB/AC 10-10-10 FERTILIZER. MOW AS NEEDED WHEN SERICEA IS OMITTED FROM THE MIXTURE. RESEED, FERTILIZE AND MULCH DAMAGED AREAS IMMEDIATELY.

NOTES

1. NO GRADING OR FILL SHALL OCCUR WITHIN DUKE ENERGY 120' RIGHT OF WAY WITHOUT PRIOR APPROVAL BY DUKE ENERGY.
2. THERE SHALL BE NO STOCKPILING OF CONSTRUCTION MATERIALS, NOR GRADING MATERIALS WITHING DUKE ENERGY RIGHT OF WAY.

NO VEGETATED SETBACK EXISTS ON THIS PROPERTY.

ARCHITECTURAL CONCEPTS INC
2414 WEST EAU GALLIE BLVD. SUITE 302 MELBOURNE, FL 32935

NORTH CAROLINA PROFESSIONAL ENGINEER SEAL LINWOOD E. STROUD
PE 5279
10/25/22
LINWOOD E. STROUD, P.E.

STROUD ENGINEERING, P.A.
107-B COMMERCE STREET
GREENVILLE, NORTH CAROLINA 27858
(252) 756-9352
LICENSE NO.C-0647

TO THE BEST OF THE ENGINEER'S KNOWLEDGE, THE PLANS AND SPECIFICATIONS COMPLY WITH THE APPLICABLE MINIMUM BUILDING CODES AND THE APPLICABLE FIRE-SAFETY STANDARDS AS DETERMINED BY THE LOCAL AUTHORITY IN ACCORDANCE WITH THIS SECTION.

PROPOSED:

THE EMBASSY AT MOREHEAD CITY

A NEW SKILLED NURSING, MEMORY CARE, & ASSISTED LIVING FACILITY

3822 GALANTIS DRIVE
MOREHEAD CITY, NC 28557

DO NOT SCALE PRINTS

THE DOCUMENTS AND THE INFORMATION CONTAINED HEREIN ARE THE SOLE PROPERTY OF ARCHITECTURAL CONCEPTS INC. UNAUTHORIZED REPRODUCTION AND/OR REUSE MAY BE PROSECUTED IN ACCORDANCE WITH THE APPROPRIATE COPYRIGHT AND PATENT LAWS.

PUBLICATION	DATE
CONCEPT:	XX-XX-XX
SCHEMATIC DESIGN:	07-16-21
PRELIMINARY DESIGN:	07-01-21
DESIGN DEVELOPMENT:	09-01-21
PERMIT SET:	03-25-22
BID SET:	10-15-21
FOR CONSTRUCTION:	XX-XX-XX

REVISIONS:

REV. #	DATE	REVISION TITLE
1	06-08-22	TOWN OF MOREHEAD CITY SITE PLAN REVISIONS
2	07-11-22	COORDINATION/VE CHANGES & NCDHHS COMMENTS
3	10-11-22	NCDOI-FIRE MARSHAL COMMENTS
	10-25-22	REVISE POND

PLOT DATE: 9/14/21

FILE LOCATION:

SHEET DESCRIPTION:

GRADING, DRAINAGE, EROSION, SEDIMENTATION CONTROL, & STORMWATER MANAGEMENT PLAN

PROJECT NO. 1902

SCALE: 1"=30'

DRAWING NO.

C2A OF 8

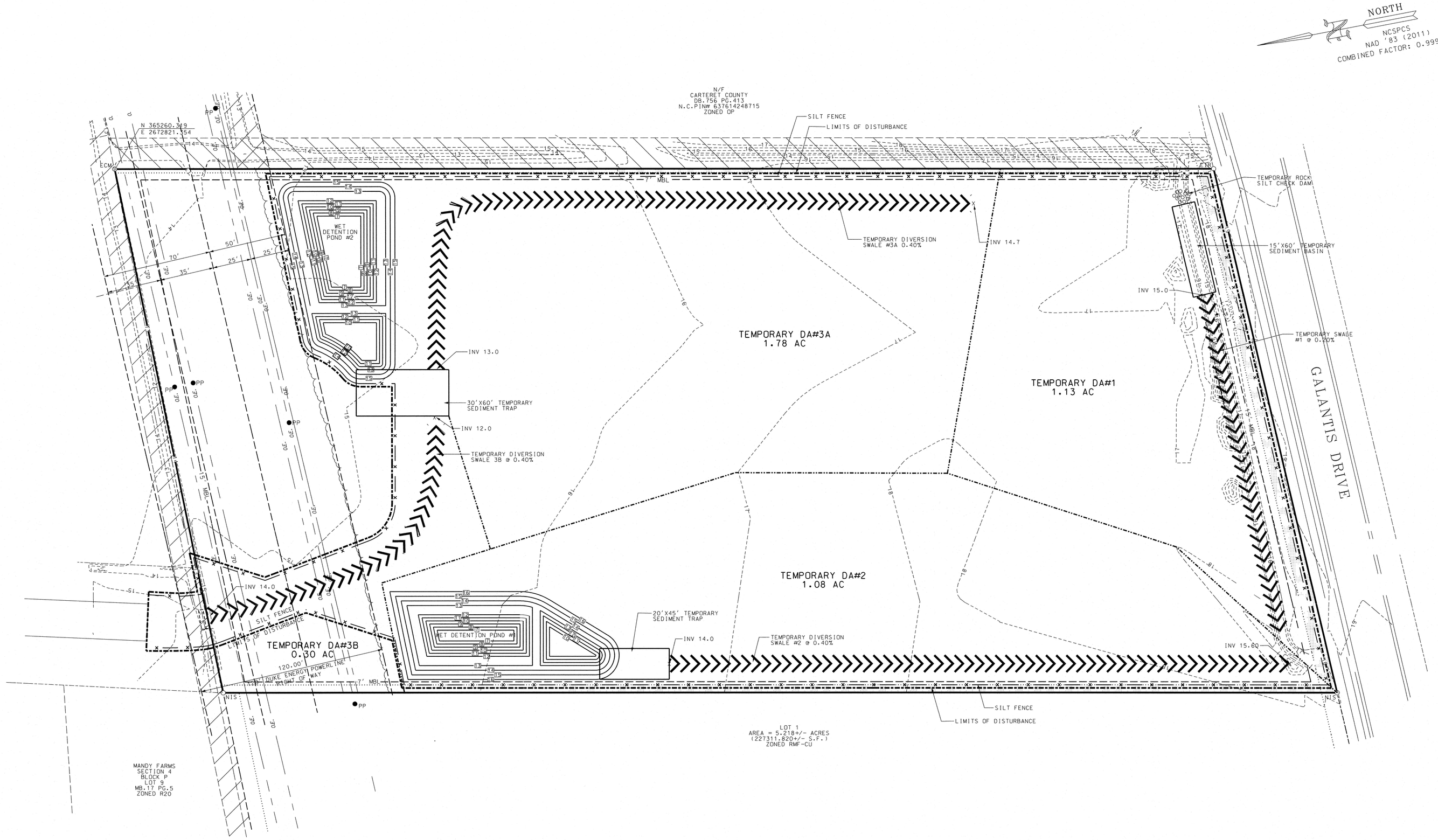

NOTES

1. NO GRADING OR FILL SHALL OCCUR WITHIN DUKE ENERGY 120' RIGHT OF WAY WITHOUT PRIOR APPROVAL BY DUKE ENERGY.
2. THERE SHALL BE NO STOCKPILING OF CONSTRUCTION MATERIALS, NOR GRADING MATERIALS WITHING DUKE ENERGY RIGHT OF WAY.

LEGEND

TOC	FINISH TOP OF CURB ELEVATION
TSW	FINISH TOP OF SIDEWALK ELEVATION
FES	FLARED END SECTION
CB	CATCH BASIN
DI	DROP INLET
OS	OUTLET STRUCTURE
	EXISTING CONTOUR
XX	PROPOSED CONTOUR
RD	ROOF DRAIN
	STORM DRAIN
	DRAINAGE AREA LINE
	LIMITS OF DISTURBANCE

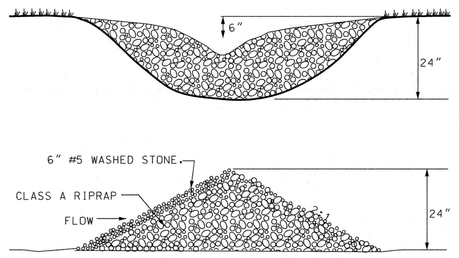

ROCK SILT CHECK DAM DETAIL (1 / C2B)

SCALE: NTS

ARCHITECTURAL CONCEPTS INC
2401 WEST BAY DRIVE SUITE 303 LARGO FL 33770

NORTH CAROLINA PROFESSIONAL ENGINEER LINWOODE STROUD # PE 5279

10/25/22
LINWOOD E. STROUD, P.E.

STROUD ENGINEERING, P.A.
107-B COMMERCE STREET
GREENVILLE, NORTH CAROLINA 27858
(252) 756-9352
LICENSE NO.C-0647

TO THE BEST OF THE ENGINEER'S KNOWLEDGE, THE PLANS AND SPECIFICATIONS COMPLY WITH THE APPLICABLE MINIMUM BUILDING CODES AND THE APPLICABLE FIRE-SAFETY STANDARDS AS DETERMINED BY THE LOCAL AUTHORITY IN ACCORDANCE WITH THIS SECTION.

PROPOSED:

THE EMBASSY AT MOREHEAD CITY

A NEW SKILLED NURSING, MEMORY CARE, & ASSISTED LIVING FACILITY

3822 GALANTIS DRIVE
MOREHEAD CITY, NC 28557

DO NOT SCALE PRINTS

THE DOCUMENTS AND THE INFORMATION CONTAINED HEREIN ARE THE SOLE PROPERTY OF ARCHITECTURAL CONCEPTS INC. UNAUTHORIZED REPRODUCTION AND/OR REUSE MAY BE PROSECUTED IN ACCORDANCE WITH THE APPROPRIATE COPYRIGHT AND PATENT LAWS.

PUBLICATION	DATE
CONCEPT:	XX-XX-XX
SCHEMATIC DESIGN:	07-16-21
PRELIMINARY DESIGN:	07-01-21
DESIGN DEVELOPMENT:	09-01-21
PERMIT SET:	03-25-22
BID SET:	10-15-21
FOR CONSTRUCTION:	XX-XX-XX

REVISIONS:

REV. #	DATE	REVISION TITLE
1	06-08-22	TOWN OF MOREHEAD CITY SITE PLAN REVISIONS
2	07-11-22	COORDINATION/VE CHANGES & NCDHHS COMMENTS
3	10-11-22	NCDOI-FIRE MARSHAL COMMENTS
	10-25-22	REVISE POND

PLOT DATE: 9/14/21

FILE LOCATION:

SHEET DESCRIPTION:

EROSION CONTROL TEMPORARY DIVERSION PLAN

PROJECT NO.	SCALE:
1902	1"=30'

DRAWING NO.

C2B OF 8

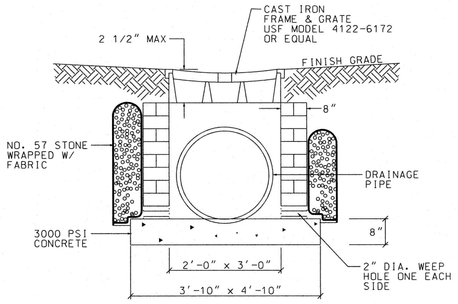

NOTE:
INTERIOR DIM. = 24" X 36"

TYPICAL DROP INLET (1/C4)

SCALE: NTS

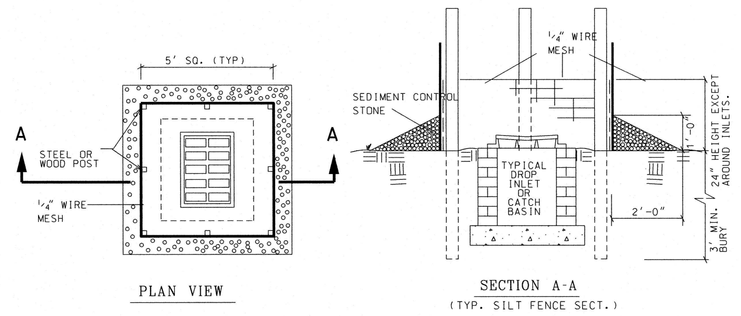

PLAN VIEW

SECTION A-A
(TYP. SILT FENCE SECT.)

INLET PROTECTOR (2/C4)

SCALE: NTS

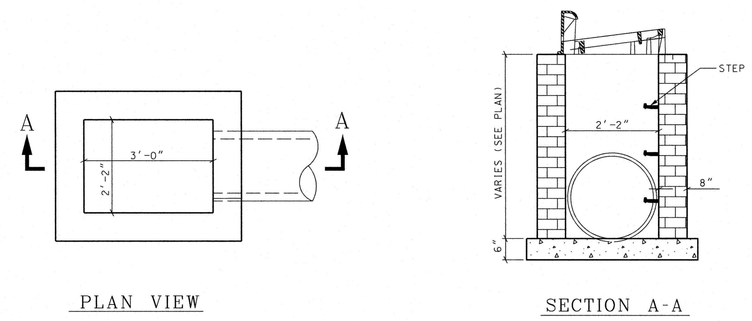

PLAN VIEW

SECTION A-A

STANDARD CATCH BASIN DETAIL (3/C4)

SCALE: 1/2"=1'-0"

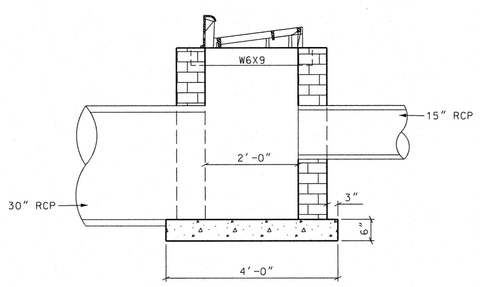

SECTION B-B

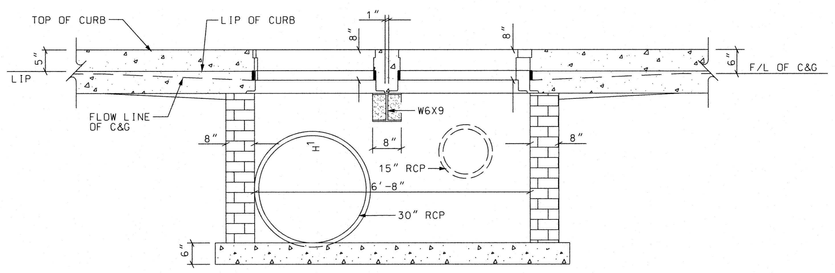

SECTION C-C

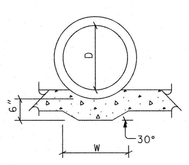

DETAIL

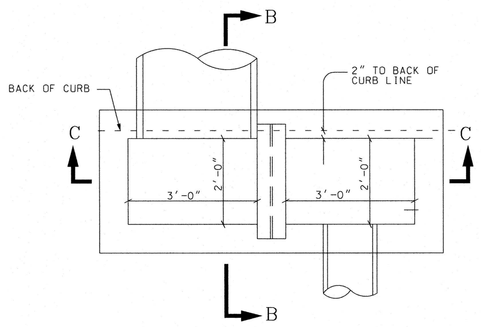

PLAN VIEW

DOUBLE CATCH BASIN DETAIL - CB#11 (4/C4)

SCALE: 1/2"=1'-0"

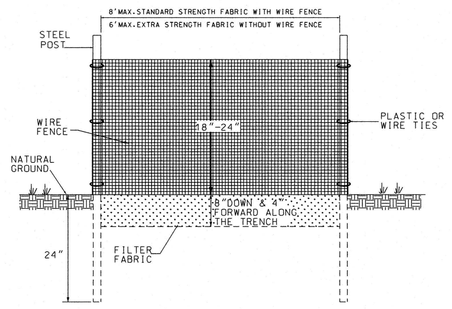

INSTALLATION NOTES:

1. THE BASE OF BOTH END POSTS SHOULD BE AT LEAST ONE FOOT HIGHER THAN THE MIDDLE OF THE FENCE. CHECK WITH A LEVEL IF NECESSARY.
2. INSTALL POSTS 4 FEET APART IN CRITICAL AREAS AND 6 FEET APART ON STANDARD APPLICATIONS.
3. INSTALL POSTS 2 FEET DEEP ON THE DOWNSTREAM SIDE OF THE SILT FENCE, AND AS CLOSE AS POSSIBLE TO THE FABRIC, ENABLING POSTS TO SUPPORT THE FABRIC FROM UPSTREAM WATER PRESSURE.
4. INSTALL POSTS WITH THE NIPPLES FACING AWAY FROM THE SILT FABRIC.
5. ATTACH THE FABRIC TO EACH POST WITH THREE TIES, ALL SPACED WITHIN THE TOP 8 INCHES OF THE POST. ATTACH EACH TIE DIAGONALLY 45 DEGREES THROUGH THE FABRIC, WITH EACH PUNCTURE AT LEAST 1 INCH VERTICALLY APART. ALSO, EACH TIE SHOULD BE POSITIONED TO HANG ON A POST NIPPLE WHEN TIGHTENED TO PREVENT SAGGING.
6. WRAP APPROXIMATELY 6 INCHES OF FABRIC AROUND THE END POSTS AND SECURE WITH 3 TIES.
7. NO MORE THAN 24 INCHES OF A 36 INCH FABRIC IS ALLOWED ABOVE GROUND LEVEL.
8. THE INSTALLATION SHOULD BE CHECKED AND CORRECTED FOR ANY DEVIATIONS BEFORE COMPACTION.
9. COMPACTION IS VITALLY IMPORTANT FOR EFFECTIVE RESULTS. COMPACT THE SOIL IMMEDIATELY NEXT TO THE SILT FENCE FABRIC WITH THE FRONT WHEEL OF THE TRACTOR, SKID STEER, OR ROLLER EXERTING AT LEAST 60 POUNDS PER SQUARE INCH. COMPACT THE UPSTREAM SIDE FIRST, AND THEN EACH SIDE TWICE FOR A TOTAL OF 4 TRIPS.

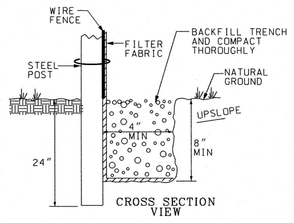

TYPICAL SILT FENCE DETAIL (5/C4)

SCALE: NTS

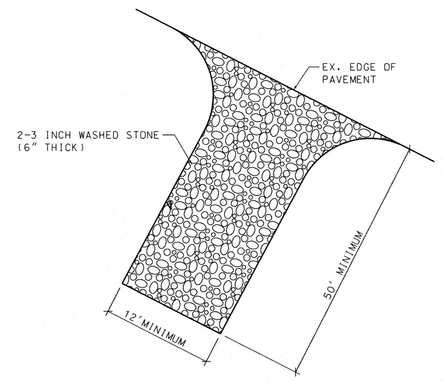

TYPICAL STONE CONSTRUCTION ENTRANCE (6/C4)

SCALE: NTS

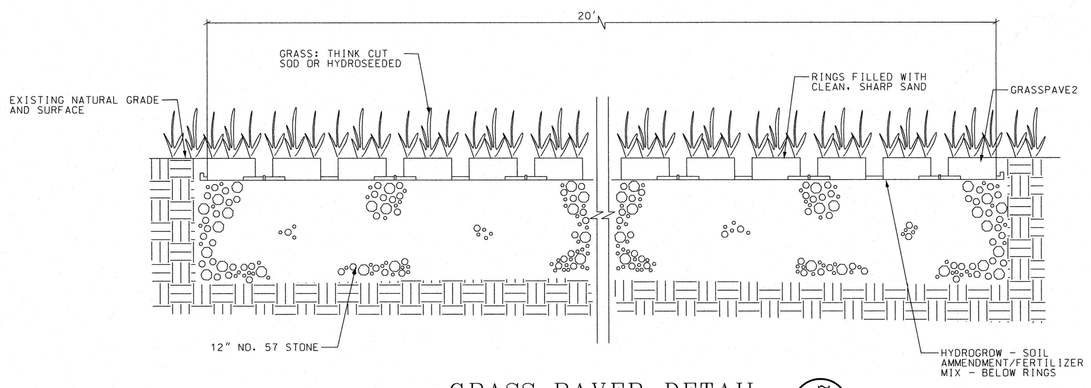

GRASS PAVER DETAIL (7/C4)

SCALE: NTS

ARCHITECTURAL CONCEPTS INC
2401 WEST BAY DRIVE SUITE 343 LARGO FL 33770

NORTH CAROLINA PROFESSIONAL ENGINEER SEAL # PE 5279 LINWOOD E. STROUD
10-1-22
LINWOOD E. STROUD P.E.

STROUD ENGINEERING, P.A.
107-B COMMERCE STREET
GREENVILLE, NORTH CAROLINA 27858
(252) 756-9352
LICENSE NO.C-0647

TO THE BEST OF THE ENGINEER'S KNOWLEDGE, THE PLANS AND SPECIFICATIONS COMPLY WITH THE APPLICABLE MINIMUM BUILDING CODES AND THE APPLICABLE FIRE-SAFETY STANDARDS AS DETERMINED BY THE LOCAL AUTHORITY IN ACCORDANCE WITH THIS SECTION.

PROPOSED:

THE EMBASSY AT MOREHEAD CITY

A NEW SKILLED NURSING, MEMORY CARE, & ASSISTED LIVING FACILITY

3822 GALANTIS DRIVE
MOREHEAD CITY, NC 28557

DO NOT SCALE PRINTS

THE DOCUMENTS AND THE INFORMATION CONTAINED HEREIN ARE THE SOLE PROPERTY OF ARCHITECTURAL CONCEPTS INC. UNAUTHORIZED REPRODUCTION AND/OR REUSE MAY BE PROSECUTED IN ACCORDANCE WITH THE APPROPRIATE COPYRIGHT AND PATENT LAWS.

PUBLICATION	DATE
CONCEPT:	XX-XX-XX
SCHEMATIC DESIGN:	07-16-21
PRELIMINARY DESIGN:	07-01-21
DESIGN DEVELOPMENT:	09-01-21
PERMIT SET:	03-25-22
BID SET:	10-15-21
FOR CONSTRUCTION:	XX-XX-XX

REVISIONS:

REV. #	DATE	REVISION TITLE
1	06-08-22	TOWN OF MOREHEAD CITY SITE PLAN REVISIONS
2	07-11-22	COORDINATION/VE CHANGES & NCDHHS COMMENTS
3	10-11-22	NCDOI-FIRE MARSHAL COMMENTS

PLOT DATE: 9/14/21

FILE LOCATION:

SHEET DESCRIPTION:

DRAINAGE DETAILS

PROJECT NO. 1902

SCALE: AS SHOWN

DRAWING NO.

C4 OF 8

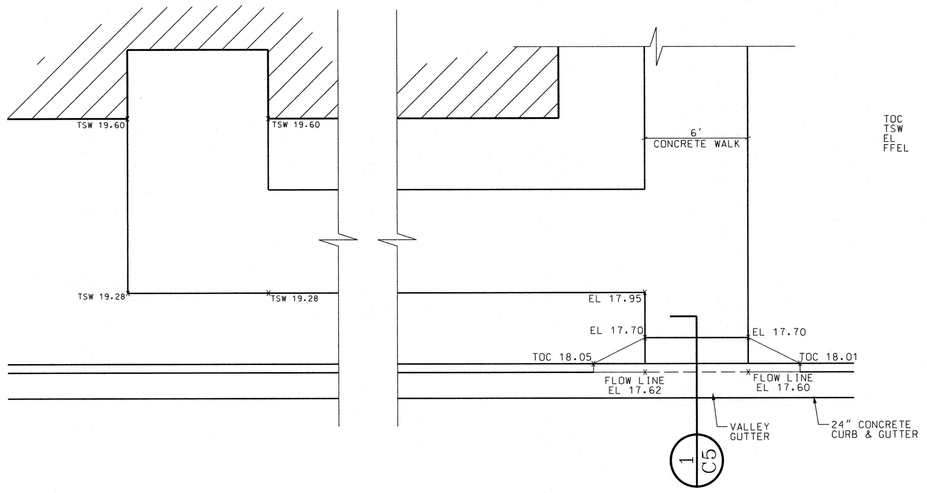

WALKWAY DETAIL #1 (A / C5)

SCALE: 1"=5'

LEGEND

TOC	FINISH TOP OF CURB ELEVATION
TSW	FINISH TOP OF SIDEWALK ELEVATION
EL	ELEVATION
FFEL	FINISH FLOOR ELEVATION

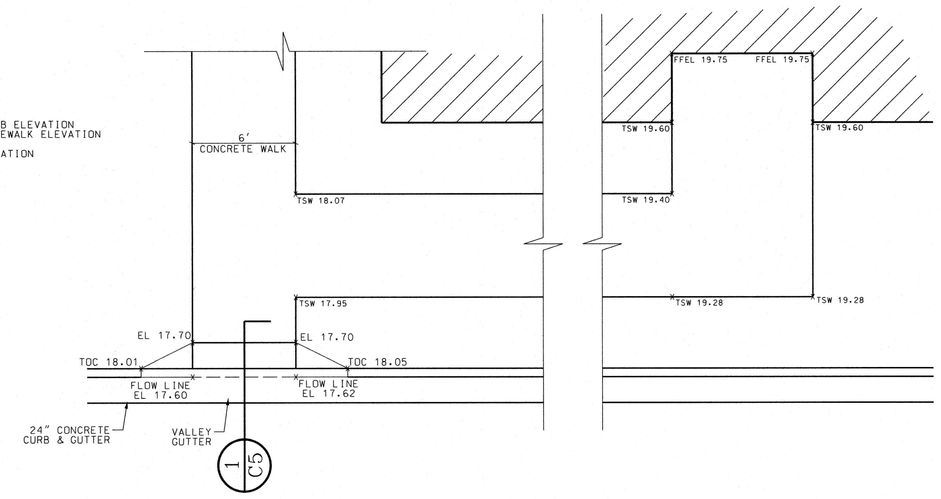

WALKWAY DETAIL #2 (B / C5)

SCALE: 1"=5'

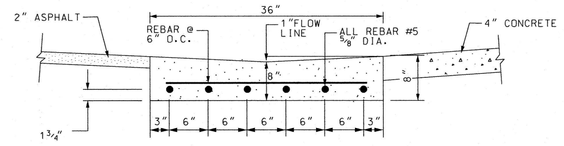

SECTION VIEW

GENERAL NOTES:

1. A CONTRACTION JOINTS SHALL BE SPACED @ 10 INTERVALS.
2. CONTRACTION JOINTS MAY BE INSTALLED WITH THE USE OF TEMPLATES OR FORMED BY OTHER METHODS. WHERE CONTRACTION JOINTS ARE NOT FORMED BY TEMPLATES, A MIN.DEPTH OF 1¼" IS REQUIRED.
3. EXPANSION JOINTS ARE REQUIRED AT 90' INTERVALS AND AT BOTH ENDS OF THE RADIUS TERMINATING THE VALLEY GUTTER.EXPANSION JOINTS REQUIRED WITHIN THE VALLEY GUTTER SHALL BE EVENLY SPACED ALONG THE LENGTH OF THE VALLEY GUTTER.
4. ALL CONCRETE SHALL BE 3000 PSI.
5. REBAR IS REQUIRED FOR ALL VALLEY GUTTER EXCEEDING 44' IN LENGTH (L=44')
6. APPROVAL FOR USE OF VALLEY GUTTER AT STREET INTERSECTIONS IS AT THE DISCREATION OF THE CITY ENGINEER.

STANDARD 36" VALLEY GUTTER W/ REIFORCEMENT (1 / C5)

SCALE: NTS

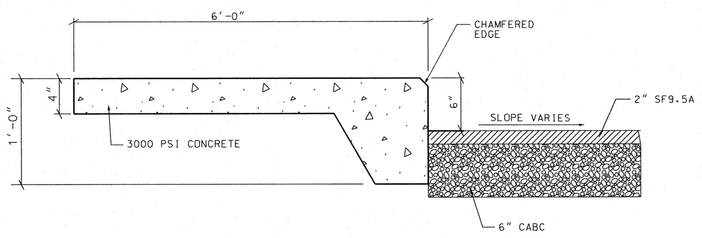

TYPICAL SIDEWAL SECTION (2 / C5)

SCALE: NTS

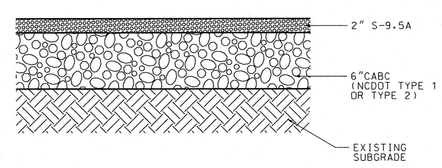

ASPHALT PAVING SECTION (3 / C5)

SCALE: NTS

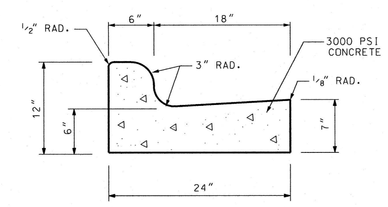

STANDARD CURB & GUTTER (24") (4 / C5)

SCALE: NTS

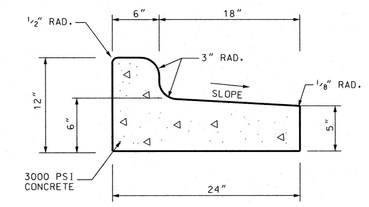

SPILL CURB & GUTTER (24") (5 / C5)

SCALE: NTS

ARCHITECTURAL CONCEPTS INC
2401 WEST BAY DRIVE SUITE 340 LARGO FL 33770
727-437-0508 727-437-0509 FAX
WWW.ARCHITECTURALCONCEPTS.NET

NORTH CAROLINA PROFESSIONAL ENGINEER LINWOOD E. STROUD
PE 5279
10-11-22
LINWOOD E. STROUD, P.E.

STROUD ENGINEERING, P.A.
107-B COMMERCE STREET
GREENVILLE, NORTH CAROLINA 27858
(252) 756-9352
LICENSE NO.C-0647

TO THE BEST OF THE ENGINEER'S KNOWLEDGE, THE PLANS AND SPECIFICATIONS COMPLY WITH THE APPLICABLE MINIMUM BUILDING CODES AND THE APPLICABLE FIRE-SAFETY STANDARDS AS DETERMINED BY THE LOCAL AUTHORITY IN ACCORDANCE WITH THIS SECTION.

PROPOSED:

THE EMBASSY AT MOREHEAD CITY

A NEW SKILLED NURSING, MEMORY CARE, & ASSISTED LIVING FACILITY

3822 GALANTIS DRIVE
MOREHEAD CITY, NC 28557

DO NOT SCALE PRINTS

THE DOCUMENTS AND THE INFORMATION CONTAINED HEREIN ARE THE SOLE PROPERTY OF ARCHITECTURAL CONCEPTS INC. UNAUTHORIZED REPRODUCTION AND/OR REUSE MAY BE PROSECUTED IN ACCORDANCE WITH THE APPROPRIATE COPYRIGHT AND PATENT LAWS.

PUBLICATION	DATE
CONCEPT:	XX-XX-XX
SCHEMATIC DESIGN:	07-16-21
PRELIMINARY DESIGN:	07-01-21
DESIGN DEVELOPMENT:	09-01-21
PERMIT SET:	03-25-22
BID SET:	10-15-21
FOR CONSTRUCTION:	XX-XX-XX

REVISIONS:

REV. #	DATE	REVISION TITLE
1	06-08-22	TOWN OF MOREHEAD CITY SITE PLAN REVISIONS
2	07-11-22	COORDINATION/VE CHANGES & NCDHHS COMMENTS
3	10-11-22	NCDOI-FIRE MARSHAL COMMENTS

PLOT DATE: 9/14/21

FILE LOCATION:

SHEET DESCRIPTION:

SITE WORK DETAILS

PROJECT NO. 1902

SCALE: AS SHOWN

DRAWING NO.

C5 OF 8

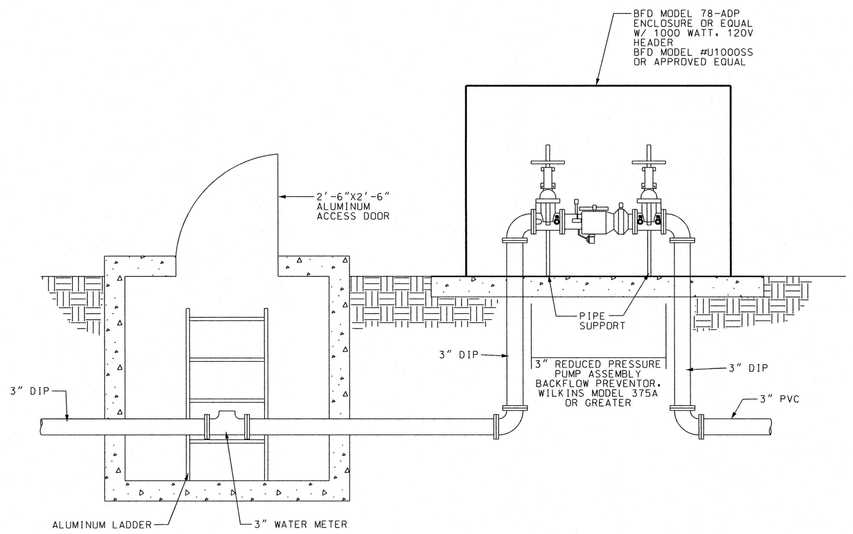

3" DOMESTIC SERVICE (1 / C6)

SCALE: NTS

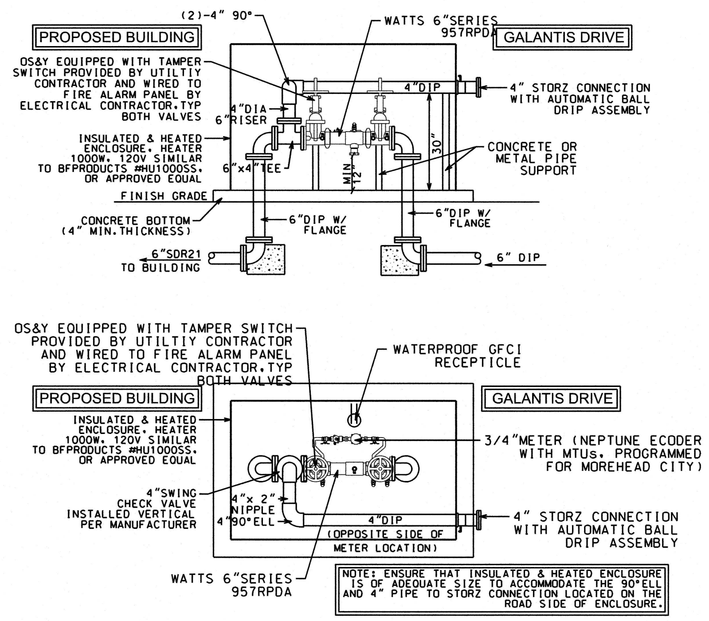

REDUCED PRESSURE DETECTOR ASSEMBLY (2 / C6)

SCALE: NTS

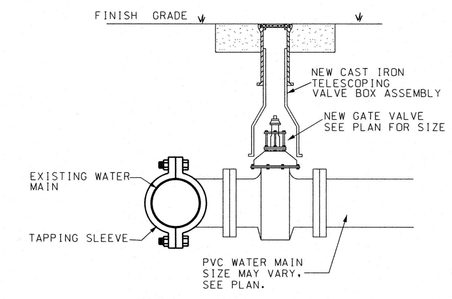

NOTE:
BACKSIDE TAPPING OF EXISTING MAIN SHALL BE APPROVED BY THE ENGINEER PRIOR TO INSTALLATION OF TAP.

TAPPING TEE & VALVE (3 / C6)

SCALE: NTS

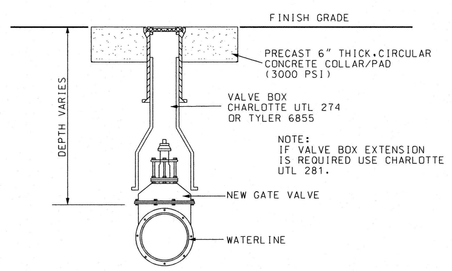

GATE VALVE & VALVE BOX (4 / C6)

SCALE: NTS

NOTE:
VALVE BOX SHALL BE CHARLOTTE UTL=274, OR TYLER 6855.
VALVE BOX EXTENSION SHALL BE CHARLOTTE
UTL - 281.

	COMPLETE		TOP AND COVER		BOTTOM	
SLIP TYPE	EXTENSION, INCHES	LBS. WT.	INS. LGTH.	LBS. WT.	INS. LGTH.	LBS. WT.
461-A	18-24	60	10	35	15	25
562-A	24-36	80	16	45	24	35
564-A	36-48	92	16	47	36	45
664-A	39-60	106	26	63	36	45

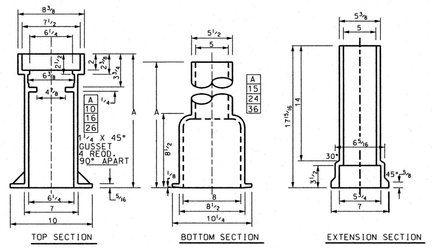

VALVE BOX DETAIL (5 / C6)

SCALE: NTS

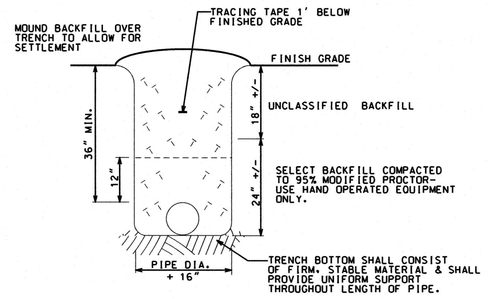

WATER TRENCH DETAIL (6 / C6)

SCALE: NTS

RESULTANT THRUST AT FITTING AT 150 PSI WATER PRESSURE

NOM. PIPE DIA.	TOTAL POUNDS DEAD END	90° BEND	45° BEND	22½/2° BEND	11¼/4° BEND
4"	2,700	3,800	2,100	1,100	530
6"	5,600	8,000	4,300	2,200	1,100
8"	9,700	13,600	7,400	3,800	1,900
10"	14,500	20,500	11,100	5,700	2,900
12"	20,500	29,000	15,700	8,000	4,000
14"	27,600	39,000	21,100	11,000	5,400
16"	35,700	50,400	27,300	14,000	7,000
18"	44,800	63,400	34,400	17,500	8,800
20"	55,000	77,800	42,100	21,500	10,800
24"	78,500	111,000	60,000	31,600	15,400
30"	120,600	170,600	92,300	47,100	23,600
36"	172,800	244,400	132,300	67,500	33,900
42"	233,300	330,000	178,600	91,000	45,700
48"	304,000	430,000	232,700	118,600	59,600
54"	384,100	543,200	294,000	149,000	75,300

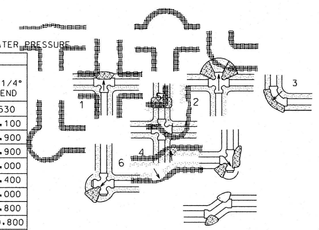

1. THRU LINE CONNECTION, TEE
2. THRU LINE CONNECTION, CROSS USED AS TEE.
3. DIRECTION CHANGE, ELBOW
4. CHANGE LINE SIZE, REDUCER
5. DIRECTION CHANGE, TEE USED AS ELBOW
6. DIRECTION CHANGE, CROSS USED AS ELBOW
7. DIRECTION CHANGE

SOIL	BEARING LOAD (LB/SQ.FT)
MUCK	0
SOFT CLAY	1,000
SILT	1,500
SANDY SILT	3,000
SAND	4,000
SANDY CLAY	6,000
HARD CLAY	9,000

TO DETERMINE THE SIZE OF A CONCRETE THRUST BLOCK, DIVIDE THE TOTAL FORCE BY THE BEARING VALUES OF THE SOIL. THE QUOTIENT WILL BE THE SIZE OF THE BEARING AREA OF THE THRUST BLOCK IN SQUARE FEET. APPROXIMATE VALUES FOR VARIOUS TYPES OF SOIL ARE LISTED IN TABLE.

NO RESPONSIBILITY CAN BE ASSUMED FOR THE ACCURACY OF THE DATA IN THIS TABLE DUE TO THE WIDE VARIATION OF BEARING LOAD CAPABILITIES FOR EACH SOIL TYPE.

THRUST BLOCKING DETAIL (7 / C6)

SCALE: NTS

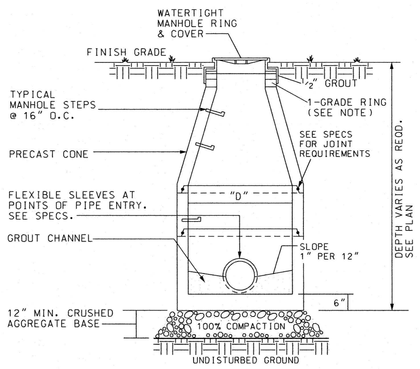

NOTES:

1. WHEN INSTALLED IN PAVEMENT MANHOLE TOP SHALL BE FLUSH WITH PAVEMENT.
2. THE DISTANCE FROM THE TOP OF MANHOLE RING & COVER AND FINISH GRADE MAY VARY WIDELY. SEE PLAN.
3. EXTEND PIPE INSIDE MANHOLE WALL 2", DEPENDING IN PIPE SIZE.
4. MIN. (1) GRADE RING REQD. IN NONE PAVED AREAS. NO GRADE RING REQD. IN PAVED AREAS EXDEPT AS NECESSARY TO MEET FINISH ELEVATION.
5. NO MORE THAN (2) GRADE RINGS SHALL BE INSTALLED.

PIPE SIZE	"D"
LESS THAN 20"	4'-0"
20" OR GREATER	5'-0"
30" OR GREATER	6'-0"

SEWER SERVICE MANHOLE DETAIL (8 / C6)

SCALE: NTS

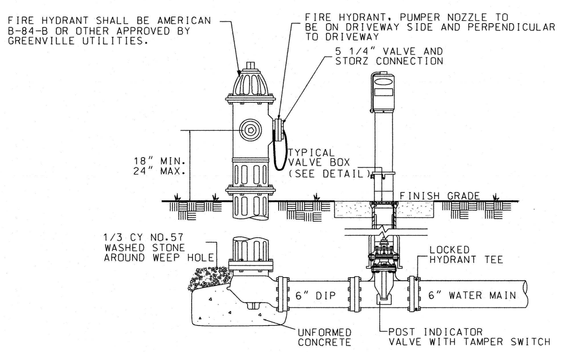

FIRE HYDRANT DETAIL (9 / C6)

SCALE: NTS

ARCHITECTURAL CONCEPTS INC
2401 WEST RAY DRIVE SUITE 502 LARGO FL 33770
E-MAIL: SAMIR@ACI-DESIGN.COM PHONE: (727) 560-8110

NORTH CAROLINA PROFESSIONAL ENGINEER LINWOOD E. STROUD # PE 5279

LINWOOD E. STROUD, P.E.

STROUD ENGINEERING, P.A.
107-B COMMERCE STREET
GREENVILLE, NORTH CAROLINA 27858
(252) 756-9352
LICENSE NO.C-0647

TO THE BEST OF THE ENGINEER'S KNOWLEDGE, THE PLANS AND SPECIFICATIONS COMPLY WITH THE APPLICABLE MINIMUM BUILDING CODES AND THE APPLICABLE FIRE-SAFETY STANDARDS AS DETERMINED BY THE LOCAL AUTHORITY IN ACCORDANCE WITH THIS SECTION.

PROPOSED:

THE EMBASSY AT MOREHEAD CITY

A NEW SKILLED NURSING, MEMORY CARE, & ASSISTED LIVING FACILITY

3822 GALANTIS DRIVE
MOREHEAD CITY, NC 28557

DO NOT SCALE PRINTS

THE DOCUMENTS AND THE INFORMATION CONTAINED HEREIN ARE THE SOLE PROPERTY OF ARCHITECTURAL CONCEPTS INC. UNAUTHORIZED REPRODUCTION AND/OR REUSE MAY BE PROSECUTED IN ACCORDANCE WITH THE APPROPRIATE COPYRIGHT AND PATENT LAWS.

PUBLICATION	DATE
CONCEPT:	XX-XX-XX
SCHEMATIC DESIGN:	07-16-21
PRELIMINARY DESIGN:	07-01-21
DESIGN DEVELOPMENT:	09-01-21
PERMIT SET:	03-25-22
BID SET:	10-15-21
FOR CONSTRUCTION:	XX-XX-XX

REVISIONS:

REV. #	DATE	REVISION TITLE
1	06-08-22	TOWN OF MOREHEAD CITY SITE PLAN REVISIONS
2	07-11-22	COORDINATION/VE CHANGES & NCDHHS COMMENTS
3	10-11-22	NCDOI-FIRE MARSHAL COMMENTS

PLOT DATE: 9/14/21

FILE LOCATION:

SHEET DESCRIPTION:

WATER & SEWER DETAILS

PROJECT NO. 1902

SCALE: AS SHOWN

DRAWING NO.

C6 OF 8

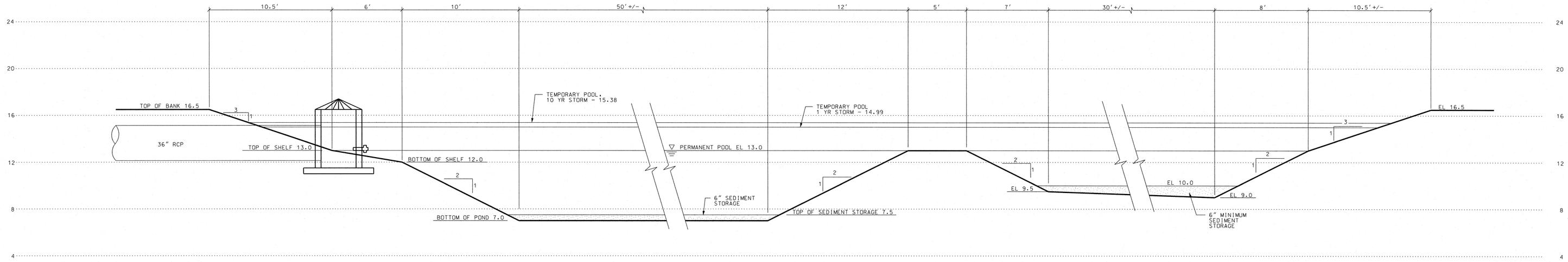

WET POND #1 PROFILE (1 / C7)
SCALE: 1"=4'

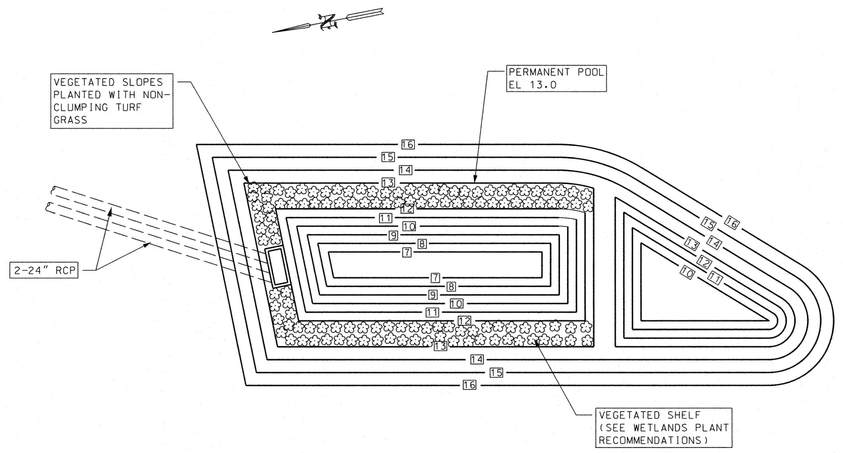

WET POND VEGETATION PLAN (A / C7)
SCALE: 1"=20'

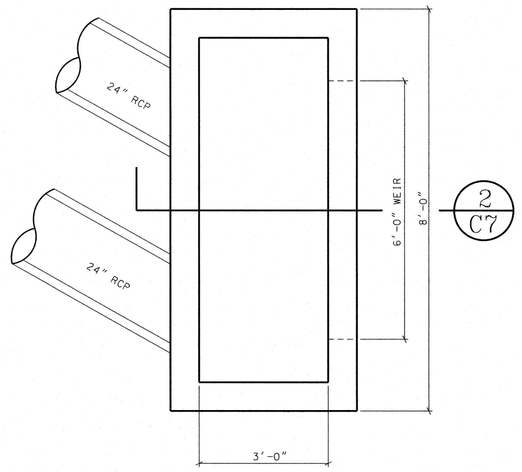

PLAN VIEW
PRECAST CONCRETE OUTLET STRUCTURE (B / C7)
SCALE: 1/2"=1'-0"

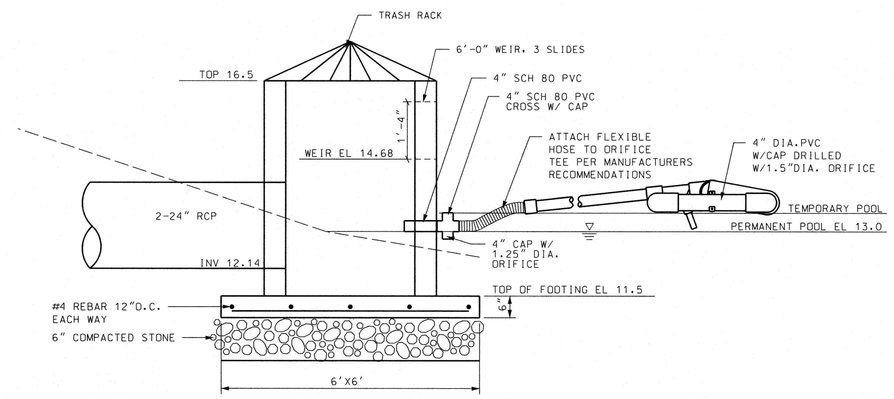

OUTLET STRUCTURE (2 / C7)
SCALE: 1/2"=1'-0"

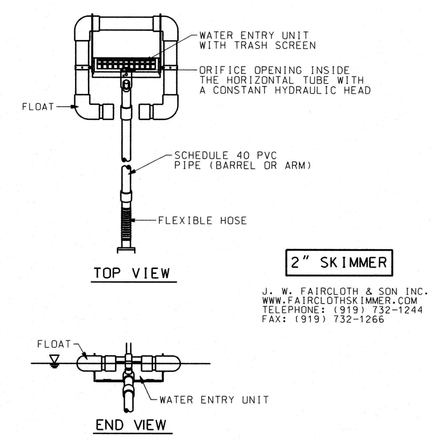

2" SKIMMER

J. W. FAIRCLOTH & SON INC.
WWW.FAIRCLOTHSKIMMER.COM
TELEPHONE: (919) 732-1244
FAX: (919) 732-1266

FAIRCLOTH SKIMMER (3 / C7)
SCALE: NTS

WET DETENTION POND #1 DESIGN DATA

DRAINAGE AREA = 106,713 SF

IMPERVIOUS AREA
- ASPHALT/PARKING/DRIVE = 23,747 SF
- ROOF = 36,929 SF
- SIDEWALKS/CONCRETE = 3,476 SF
- FUTURE = 443 SF
- TOTAL AREA = 64,595 SF

POND DESIGN SUMMARY

PERMANENT POOL ELEVATION	=	13.0 FT
PERMANENT POOL SURFACE AREA REQ'D	=	3,009 SF
PERMANENT POOL SURFACE AREA	=	3,125 SF
STORAGE POOL ELEVATION	=	14.68 FT
REQ'D STORAGE VOLUME	=	7,950 CF
PROPOSED STORAGE VOLUME	=	8,396 CF
FOREBAY DEPTH	=	3.0 FT
FOREBAY VOLUME	=	1,820 CF
MAIN BASIN DEPTH	=	6.0 FT
MAIN BASIN VOLUME	=	9,510 CF
AVERAGE DEPTH	=	5.0 FT

THE FOLLOWING CRITERIA APPLY TO VEGETATION IN AND AROUND THE WET POND:

(a) THE DAM STRUCTURE, INCLUDING FRONT AND BACK EMBANKMENT SLOPES OF THE POND SHALL BE VEGETATED WITH NON-CLUMPING TURF GRASS; TREES AND WOODY SHRUBS SHALL NOT BE ALLOWED;

(b) THE VEGETATED SHELF SHALL BE PLANTED WITH A MINIMUM OF THREE DIVERSE SPECIES OF HERBACEOUS, NATIVE VEGETATION AT A MINIMUM DENSITY OF 50 PLANTS PER 200 SQUARE FEET OF SHELF AREA.

WETLAND PLANT RECOMMENDATIONS

PLANTS FOR SUBMERGED AND PARTIALLY SUBMERGED VEGETATED SHELVES

BOTANICAL NAME	COMMON NAME
ASCLEPIAS INCARNATA	SWAMP MILKWEED
CAREX TENERA	QUILL SEDGE
CHELONE GLABRA	WHITE TURTLEHEAD
EUPATORIADELPHUS DUBIUS	DWARF JOE PYE WEED
EUPATORIADELPHUS FISTULOSUS	JOE PYE WEED
EUPATORIADELPHUS MACULATUS	SPOTTED TRUMPETWEED
HIBISCUS COCCINEUS	SCARLET ROSE MALLOW
HIBISCUS LAEVIS	HALBERDLEAF ROSEMALLOW
KOSTELETZKYA VIRGINICA	SEASHORE MALLOW
LOBELIA CARDINALIS	CARDINAL FLOWER
LOBELIA ELONGATA	LONGLEAF LOBELIA
LOBELIA SIPHILITICA	GREAT BLUE LOBELIA
RHYNCHOSPORA COLORATA	STARRUSH WHITETOP
SACCHARUM BALDWINII	NARROW PLUMEGRASS

VEGETATION SCHEDULE

WETLAND AREA	SQ FT IN WETLAND AREA	PLANT CATEGORY	# PLANTS OF CATEGORY IN WETLAND AREA
WETLANDS PLANTS	2040	HERBACEOUS PLANTS	446

PLANT REQUIREMENTS:

1. SELECT PLANTS FROM THE WETLAND PLANT LIST ABOVE.
2. A MINIMUM OF THREE (3) DIVERSE SPECIES OF HERBACEOUS, NATIVE VEGETATION.
3. A MINIMUM TWO-YEAR WARRANTY PERIOD STIPULATING REQUIREMENTS FOR PLANT SURVIVAL/REPLACEMENT. AT THE END OF THE FIRST YEAR AND AGAIN AT THE END OF THE TWO-YEAR WARRANTY PERIOD, ALL PLANTS THAT DO NOT SURVIVE MUST BE REPLACED.
4. THE DESIGN FOR PLANTINGS SHALL MINIMIZE THE NEED FOR HERBICIDES, FERTILIZERS, PESTICIDES, OR SOIL AMENDMENTS AT ANY TIME BEFORE, DURING AND AFTER CONSTRUCTION AND ON A LONG TERM BASIS. PLANTINGS SHALL BE DESIGNED TO MINIMIZE THE NEED FOR MOWING, PRUNING AND IRRIGATION.
5. PLANT MATERIAL SHOULD BE PURCHASED FROM A SIMILAR PROVENANCE OR LOCAL SOURCE TO ENSURE SURVIVABILITY.

GENERAL NOTES:

1. TOPSOIL FROM THE SITE WILL BE SPREAD ACROSS THE VEGETATED SHELF PRIOR TO PLACEMENT OF PLANTS.
2. WET DETENTION BASINS SHOULD INCORPORATE SEVERAL (MINIMUM OF THREE (3) DIVERSE SPECIES OF SHALLOW WATER EMERGENT AND SHALLOW LAND HERBACEOUS VEGETATION ON THE VEGETATED SHELF.
3. SPACING SHOULD BE APPROXIMATELY 24"-36" CENTERS, YIELDING COVERAGE IN APPROXIMATELY 1-2 YEARS, RESPECTIVELY.
4. TURF GRASS SHOULD BE MAINTAINED ON THE TOPS OF BERMS AND ON THE EXTERIOR SLOPES OF CONTAINMENT BERMS.

SOIL SPECIFICATIONS

SOILS USED WITHIN A STORMWATER BMP MUST ADHERE TO THE FOLLOWING REQUIREMENTS:

1. THE SOIL MIX MUST BE UNIFORM AND FREE OF STONES, STUMPS, ROOTS, OR OTHER SIMILAR MATERIAL GREATER THAN 2 INCHES.
2. SOIL TEXTURE OF THE MIX USED FOR STORMWATER WETLANDS SHOULD BE LOAMY SAND, WITH NO MORE THAN 10% CLAY (USDA SOIL TEXTURAL CLASSIFICATION).
3. A MINIMUM ORGANIC CONTENT OF 10% BY DRY WEIGHT FOR AREAS PLANTED WITH WOODY SPECIES AND 5% FOR TURF AREAS.
4. THE PH SHOULD BE BETWEEN 5.5 AND 7.0. IF THE PH FALLS OUTSIDE OF THIS RANGE, IT MAY BE MODIFIED WITH LIME TO INCREASE THE PH OR IRON SULFATE AND SULFUR TO LOWER THE PH. THE LIME OR IRON SULFATE MUST BE MIXED UNIFORMLY INTO THE SOIL PRIOR TO USE.
5. TOPSOIL STOCKPILE LOCATION (IF USING ON-SITE SOILS) OR SOURCE OF TOPSOIL IF IMPORTED TO THE SITE. SOIL ANALYSIS FOR ALL TOPSOIL TO BE USED WITHIN A BMP FACILITY.

PLANTING SPECIFICATIONS:

1. FOR EROSION CONTROL PLANTING AND BANK STABILIZATION (UPLAND AREA) FOLLOW EROSION CONTROL SEEDING SCHEDULE.
2. UTILIZE A 90-DAY SLOW RELEASE FERTILIZER TABLET FOR PLANTS.
3. PLACE 3 OR 4 INCHES OF QUALITY TOPSOIL TO THE SHALLOW LAND AND SHALLOW WATER REGIONS. THE PROJECT CAN UTILIZE THE EXISTING TOPSOIL BY STOCK PILING ON SITE AND AMENDING SOIL AS NECESSARY BASED ON SOIL ANALYSIS RESULTS.
4. THE DETENTION POND MUST BE STABILIZED WITHIN 14 DAYS OF CONSTRUCTION. CONSIDER CONSTRUCTION SEQUENCING SO THAT PLANTS CAN BE PLANTED AND THE POND CAN BE BROUGHT ONLINE WITHIN 14 DAYS.

PLANTING SEASONS:

HERBACEOUS PLANTS .....APRIL TO JUNE (RECOMMENDED)
MID-SEPTEMBER TO MID-OCTOBER
GRASSES.....YEAR ROUND

PLANTING OUT OF SEASON IS NOT RECOMMENDED. IF CONSTRUCTION SCHEDULE AND PLANTING SCHEDULE DO NOT CORRESPOND, STABILIZE BANKS (VEGETATED SHELF) WITH APPROPRIATE TEMPORARY COVER CROP AND EROSION CONTROL MATTING UNTIL APPROPRIATE PLANTING SEASON.

PLANTS SHOULD BE INSTALLED AS LARGE DRIFTS (I.E. MASSES OF A SINGLE SPECIES) WITHIN THEIR RESPECTIVE PLANTING AREA. OVERLAPPING OR WEAVING OF THE PLANTING AREA EDGES IS RECOMMENDED.

ALL PLANTS SHALL BE DIRECTLY DESCENDED FROM INDIVIDUALS GROWING WILD WITHIN 100 MILES OF THE PROJECT SITE. IF SUITABLE STOCK CANNOT BE OBTAINED, PLANTS OF OTHER GENETIC PROVENANCE MAY BE UTILIZED WITH THE APPROVAL OF THE LOCAL REGULATORY AGENCY.

DO NOT PLANT CATTAILS. CATTAILS, ALTHOUGH A WETLAND PLANT, PROVIDE A HAVEN FOR MOSQUITOES AND WILL TAKE OVER AND CROWD OUT OTHER VITAL VEGETATION.

ARCHITECTURAL CONCEPTS INC
2811 WEST BAY DRIVE, SUITE 502, LARGO, FL 33770

LINWOOD E. STROUD, P.E. 10/25/22

STROUD ENGINEERING, P.A.
107-B COMMERCE STREET
GREENVILLE, NORTH CAROLINA 27858
(252) 756-9352
LICENSE NO.C-0647

TO THE BEST OF THE ENGINEER'S KNOWLEDGE, THE PLANS AND SPECIFICATIONS COMPLY WITH THE APPLICABLE MINIMUM BUILDING CODES AND THE APPLICABLE FIRE-SAFETY STANDARDS AS DETERMINED BY THE LOCAL AUTHORITY IN ACCORDANCE WITH THIS SECTION.

PROPOSED:

THE EMBASSY AT MOREHEAD CITY

A NEW SKILLED NURSING, MEMORY CARE, & ASSISTED LIVING FACILITY

3822 GALANTIS DRIVE
MOREHEAD CITY, NC 28557

DO NOT SCALE PRINTS

THE DOCUMENTS AND THE INFORMATION CONTAINED HEREIN ARE THE SOLE PROPERTY OF ARCHITECTURAL CONCEPTS INC. UNAUTHORIZED REPRODUCTION AND/OR REUSE MAY BE PROSECUTED IN ACCORDANCE WITH THE APPROPRIATE COPYRIGHT AND PATENT LAWS.

PUBLICATION	DATE
CONCEPT:	XX-XX-XX
SCHEMATIC DESIGN:	07-16-21
PRELIMINARY DESIGN:	07-01-21
DESIGN DEVELOPMENT:	09-01-21
PERMIT SET:	03-25-22
BID SET:	10-15-21
FOR CONSTRUCTION:	XX-XX-XX

REVISIONS:

REV. #	DATE	REVISION TITLE
1	06-08-22	TOWN OF MOREHEAD CITY SITE PLAN REVISIONS
2	07-11-22	COORDINATION/VE CHANGES & NCDHHS COMMENTS
3	10-11-22	NCDOI-FIRE MARSHAL COMMENTS
	10-25-22	REVISE POND DETAILS

PLOT DATE: 9/14/21

FILE LOCATION:

SHEET DESCRIPTION:

WET DETENTION POND #1 DETAILS

PROJECT NO. 1902

SCALE: AS SHOWN

DRAWING NO.

C7 OF 8

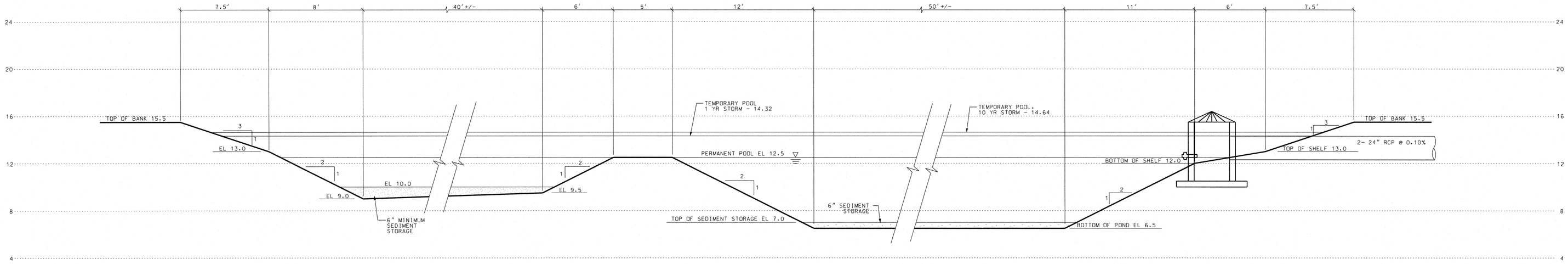

WET POND #2 PROFILE (1 / C8)

SCALE: 1"=4'

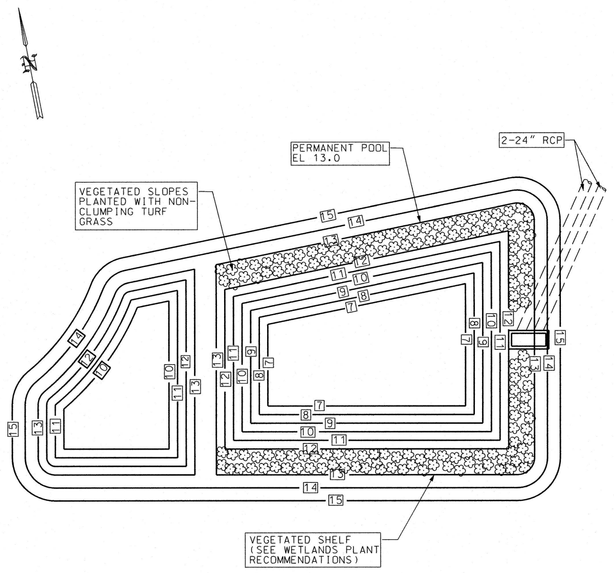

WET POND VEGETATION PLAN (A / C8)

SCALE: 1"=20'

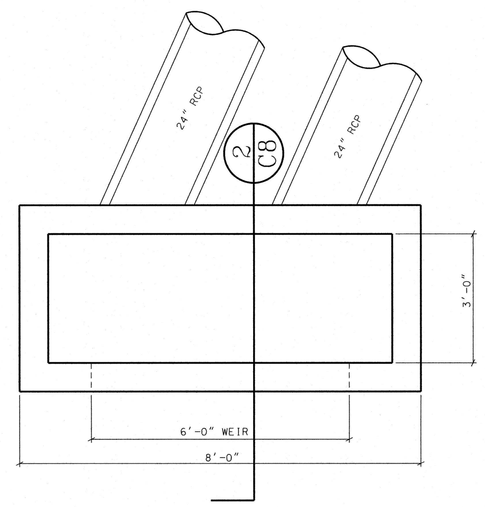

PLAN VIEW
PRECAST CONCRETE OUTLET STRUCTURE (B / C8)

SCALE: 1/2"=1'-0"

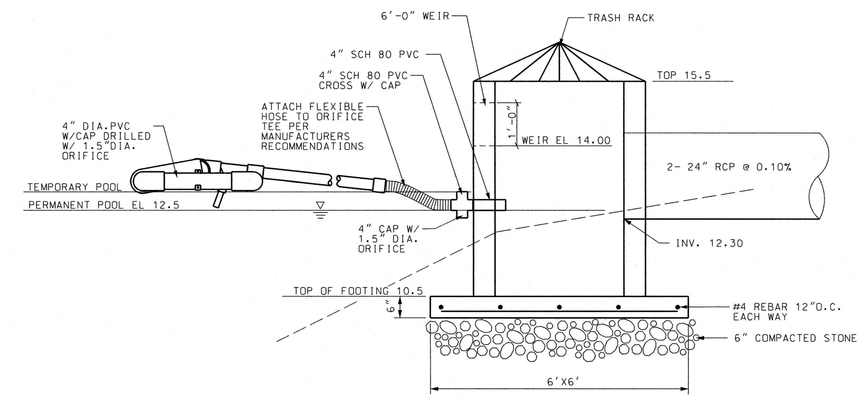

OUTLET STRUCTURE (2 / C8)

SCALE: 1/2"=1'-0"

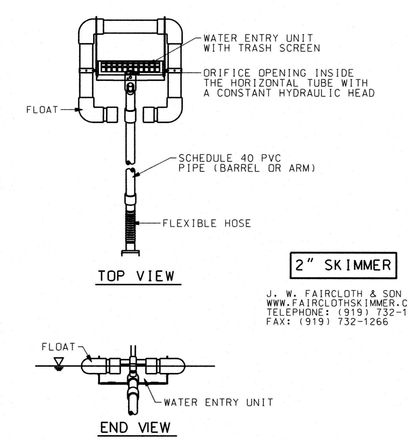

2" SKIMMER

J. W. FAIRCLOTH & SON INC.
WWW.FAIRCLOTHSKIMMER.COM
TELEPHONE: (919) 732-1244
FAX: (919) 732-1266

FAIRCLOTH SKIMMER (3 / C8)

SCALE: NTS

WET DETENTION POND #2 DESIGN DATA

DRAINAGE AREA = 100.080 SF

IMPERVIOUS AREA
ASPHALT/PARKING/DRIVE = 24.496 SF
ROOF = 36.871 SF
SIDEWALKS/CONCRETE = 7.331 SF
FUTURE = 0 SF
TOTAL AREA = 68.698 SF

POND DESIGN SUMMARY

PERMANENT POOL ELEVATION	=	12.5 FT
PERMANENT POOL SURFACE AREA REQ'D	=	3.373 SF
PERMANENT POOL SURFACE AREA	=	3.512 SF
STORAGE POOL ELEVATION	=	14.00 FT
REQ'D STORAGE VOLUME	=	8.410 CF
PROPOSED STORAGE VOLUME	=	8.673 CF
FOREBAY DEPTH	=	3.0 FT
FOREBAY VOLUME	=	2.828 CF
MAIN BASIN DEPTH	=	5.5 FT
MAIN BASIN VOLUME	=	14.138 CF
AVERAGE DEPTH	=	4.78 FT

THE FOLLOWING CRITERIA APPLY TO VEGETATION IN AND AROUND THE WET POND:

(a) THE DAM STRUCTURE, INCLUDING FRONT AND BACK EMBANKMENT SLOPES OF THE POND SHALL BE VEGETATED WITH NON-CLUMPING TURF GRASS; TREES AND WOODY SHRUBS SHALL NOT BE ALLOWED:

(b) THE VEGETATED SHELF SHALL BE PLANTED WITH A MINIMUM OF THREE DIVERSE SPECIES OF HERBACEOUS, NATIVE VEGETATION AT A MINIMUM DENSITY OF 50 PLANTS PER 200 SQUARE FEET OF SHELF AREA.

WETLAND PLANT RECOMMENDATIONS

PLANTS FOR SUBMERGED AND PARTIALLY SUBMERGED VEGETATED SHELVES

BOTANICAL NAME	COMMON NAME
ASCLEPIAS INCARNATA	SWAMP MILKWEED
CAREX TENERA	QUILL SEDGE
CHELONE GLABRA	WHITE TURTLEHEAD
EUPATORIADELPHUS DUBIUS	DWARF JOE PYE WEED
EUPATORIADELPHUS FISTULOSUS	JOE PYE WEED
EUPATORIADELPHUS MACULATUS	SPOTTED TRUMPETWEED
HIBISCUS COCCINEUS	SCARLET ROSE MALLOW
HIBISCUS LAEVIS	HALBERDLEAF ROSEMALLOW
KOSTELETZKYA VIRGINICA	SEASHORE MALLOW
LOBELIA CARDINALIS	CARDINAL FLOWER
LOBELIA ELONGATA	LONGLEAF LOBELIA
LOBELIA SIPHILITICA	GREAT BLUE LOBELIA
RHYNCHOSPORA COLORATA	STARRUSH WHITETOP
SACCHARUM BALDWINI	NARROW PLUMEGRASS

VEGETATION SCHEDULE

WETLAND AREA	SQ FT IN WETLAND AREA	PLANT CATEGORY	* PLANTS OF CATEGORY IN WETLAND AREA
WETLANDS PLANTS	2040	HERBACEOUS PLANTS	446

PLANT REQUIREMENTS:

1. SELECT PLANTS FROM THE WETLAND PLANT LIST ABOVE.
2. A MINIMUM OF THREE (3) DIVERSE SPECIES OF HERBACEOUS, NATIVE VEGETATION.
3. A MINIMUM TWO-YEAR WARRANTY PERIOD STIPULATING REQUIREMENTS FOR PLANT SURVIVAL/REPLACEMENT. AT THE END OF THE FIRST YEAR AND AGAIN AT THE END OF THE TWO-YEAR WARRANTY PERIOD, ALL PLANTS THAT DO NOT SURVIVE MUST BE REPLACED.
4. THE DESIGN FOR PLANTINGS SHALL MINIMIZE THE NEED FOR HERBICIDES, FERTILIZERS, PESTICIDES, OR SOIL AMENDMENTS AT ANY TIME BEFORE, DURING AND AFTER CONSTRUCTION AND ON A LONG TERM BASIS. PLANTINGS SHALL BE DESIGNED TO MINIMIZE THE NEED FOR MOWING, PRUNING AND IRRIGATION.
5. PLANT MATERIAL SHOULD BE PURCHASED FROM A SIMILAR PROVENANCE OR LOCAL SOURCE TO ENSURE SURVIVABILITY.

GENERAL NOTES:

1. TOPSOIL FROM THE SITE WILL BE SPREAD ACROSS THE VEGETATED SHELF PRIOR TO PLACEMENT OF PLANTS.
2. WET DETENTION BASINS SHOULD INCORPORATE SEVERAL (MINIMUM OF THREE (3) DIVERSE SPECIES OF SHALLOW WATER EMERGENT AND SHALLOW LAND HERBACEOUS VEGETATION ON THE VEGETATED SHELF.
3. SPACING SHOULD BE APPROXIMATELY 24"-36" CENTERS, YIELDING COVERAGE IN APPROXIMATELY 1-2 YEARS, RESPECTIVELY.
4. TURF GRASS SHOULD BE MAINTAINED ON THE TOPS OF BERMS AND ON THE EXTERIOR SLOPES OF CONTAINMENT BERMS.

SOIL SPECIFICATIONS

SOILS USED WITHIN A STORMWATER BMP MUST ADHERE TO THE FOLLOWING REQUIREMENTS:

1. THE SOIL MIX MUST BE UNIFORM AND FREE OF STONES, STUMPS, ROOTS, OR OTHER SIMILAR MATERIAL GREATER THAN 2 INCHES.
2. SOIL TEXTURE OF THE MIX USED FOR STORMWATER WETLANDS SHOULD BE LOAMY SAND, WITH NO MORE THAN 10% CLAY (USDA SOIL TEXTURAL CLASSIFICATION).
3. A MINIMUM ORGANIC CONTENT OF 10% BY DRY WEIGHT FOR AREAS PLANTED WITH WOODY SPECIES AND 5% FOR TURF AREAS.
4. THE PH SHOULD BE BETWEEN 5.5 AND 7.0. IF THE PH FALLS OUTSIDE OF THIS RANGE, IT MAY BE MODIFIED WITH LIME TO INCREASE THE PH OR IRON SULFATE AND SULFUR TO LOWER THE PH. THE LIME OR IRON SULFATE MUST BE MIXED UNIFORMLY INTO THE SOIL PRIOR TO USE.
5. TOPSOIL STOCKPILE LOCATION (IF USING ON-SITE SOILS) OR SOURCE OF TOPSOIL IF IMPORTED TO THE SITE. SOIL ANALYSIS FOR ALL TOPSOIL TO BE USED WITHIN A BMP FACILITY.

PLANTING SPECIFICATIONS:

1. FOR EROSION CONTROL PLANTING AND BANK STABILIZATION (UPLAND AREA) FOLLOW EROSION CONTROL SEEDING SCHEDULE.
2. UTILIZE A 90-DAY SLOW RELEASE FERTILIZER TABLET FOR PLANTS.
3. PLACE 3 OR 4 INCHES OF QUALITY TOPSOIL TO THE SHALLOW LAND AND SHALLOW WATER REGIONS. THE PROJECT CAN UTILIZE THE EXISTING TOPSOIL BY STOCK PILING ON SITE AND AMENDING SOIL AS NECESSARY BASED ON SOIL ANALYSIS RESULTS.
4. THE DETENTION POND MUST BE STABILIZED WITHIN 14 DAYS OF CONSTRUCTION. CONSIDER CONSTRUCTION SEQUENCING SO THAT PLANTS CAN BE PLANTED AND THE POND CAN BE BROUGHT ONLINE WITHIN 14 DAYS.

PLANTING SEASONS:

HERBACEOUS PLANTS ..... APRIL TO JUNE (RECOMMENDED)
MID-SEPTEMBER TO MID-OCTOBER

GRASSES..... YEAR ROUND

PLANTING OUT OF SEASON IS NOT RECOMMENDED. IF CONSTRUCTION SCHEDULE AND PLANTING SCHEDULE DO NOT CORRESPOND, STABILIZE BANKS (VEGETATED SHELF) WITH APPROPRIATE TEMPORARY COVER CROP AND EROSION CONTROL MATTING UNTIL APPROPRIATE PLANTING SEASON.

PLANTS SHOULD BE INSTALLED AS LARGE DRIFTS (I.E. MASSES OF A SINGLE SPECIES) WITHIN THEIR RESPECTIVE PLANTING AREA. OVERLAPPING OR WEAVING OF THE PLANTING AREA EDGES IS RECOMMENDED.

ALL PLANTS SHALL BE DIRECTLY DESCENDED FROM INDIVIDUALS GROWING WILD WITHIN 100 MILES OF THE PROJECT SITE. IF SUITABLE STOCK CANNOT BE OBTAINED, PLANTS OF OTHER GENETIC PROVENANCE MAY BE UTILIZED WITH THE APPROVAL OF THE LOCAL REGULATORY AGENCY.

DO NOT PLANT CATTAILS. CATTAILS, ALTHOUGH A WETLAND PLANT, PROVIDE A HAVEN FOR MOSQUITOES AND WILL TAKE OVER AND CROWD OUT OTHER VITAL VEGETATION.

ARCHITECTURAL CONCEPTS INC
2411 WEST BAY DRIVE SUITE 302 LARGO FL 33770

NORTH CAROLINA PROFESSIONAL # PE 5279 LINWOOD E. STROUD
10/25/22
LINWOOD E. STROUD, P.E.

STROUD ENGINEERING, P.A.
107-B COMMERCE STREET
GREENVILLE, NORTH CAROLINA 27858
(252) 756-9352
LICENSE NO.C-0647

TO THE BEST OF THE ENGINEER'S KNOWLEDGE, THE PLANS AND SPECIFICATIONS COMPLY WITH THE APPLICABLE MINIMUM BUILDING CODES AND THE APPLICABLE FIRE-SAFETY STANDARDS AS DETERMINED BY THE LOCAL AUTHORITY IN ACCORDANCE WITH THIS SECTION.

PROPOSED:

THE EMBASSY AT MOREHEAD CITY

A NEW SKILLED NURSING, MEMORY CARE, & ASSISTED LIVING FACILITY

3822 GALANTIS DRIVE
MOREHEAD CITY, NC 28557

DO NOT SCALE PRINTS

THE DOCUMENTS AND THE INFORMATION CONTAINED HEREIN ARE THE SOLE PROPERTY OF ARCHITECTURAL CONCEPTS INC. UNAUTHORIZED REPRODUCTION AND/OR REUSE MAY BE PROSECUTED IN ACCORDANCE WITH THE APPROPRIATE COPYRIGHT AND PATENT LAWS.

PUBLICATION	DATE
CONCEPT:	XX-XX-XX
SCHEMATIC DESIGN:	07-16-21
PRELIMINARY DESIGN:	07-01-21
DESIGN DEVELOPMENT:	09-01-21
PERMIT SET:	03-25-22
BID SET:	10-15-21
FOR CONSTRUCTION:	XX-XX-XX

REVISIONS:

REV. #	DATE	REVISION TITLE
1	06-08-22	TOWN OF MOREHEAD CITY SITE PLAN REVISIONS
2	07-11-22	COORDINATION/VE CHANGES & NCDHHS COMMENTS
3	10-11-22	NCDOI-FIRE MARSHAL COMMENTS
	10-25-22	REVISE POND DETAILS

PLOT DATE: 9/14/21

FILE LOCATION:

SHEET DESCRIPTION:

WET DETENTION POND #2 DETAILS

PROJECT NO. 1902

SCALE: AS SHOWN

DRAWING NO.

C8 OF 8