* ALL TRUSS PROFILES ARE NOT SHOWN.
* BOTTOM CHORD RECESSES ARE NOT SHOWN FOR CLARITY. SEE PLANS FOR LOCATIONS OF RECESSES.
*WEB MEMBERS NOT SHOWN.

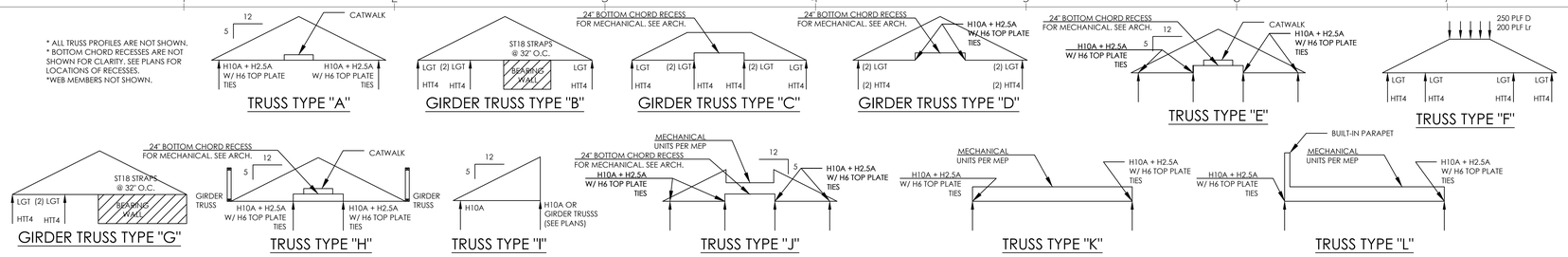

STUD SCHEDULE

PLATE HEIGHT	EXTERIOR WALLS[1]	INTERIOR WALLS[1]	CONSTRUCTION BRIDGING/BLOCKING LOCATIONS[2]	NON-BEARING WALLS (U.N.O.)
10'-0"	2x6 @ 16" O.C.	2x6 @ 16" O.C.	MID-POINTS	2x4 @16" O.C.
12'-0"	2x6 @ 16" O.C.	2x6 @ 16" O.C.	MID-POINTS	2x4 @16" O.C.
14'-0"	2x6 @ 16" O.C.	2x6 @ 16" O.C.	THIRD-POINTS	2x4 @16" O.C.

[1] SEE PLANS FOR STUD SIZING DIFFERING FROM SCHEDULE.
[2] DURING CONSTRUCTION, BRIDGING/BLOCKING ELEMENTS ARE REQUIRED TO BRACE STUDS.

HEADER AND BEAM SCHEDULE

TYPE	SIZE	NOTES
H1	(2) 2x8	W/ (1) 1/2" PLYWOOD SPACER. SEE 7/S5
H2	(2) 2x10	W/ (1) 1/2" PLYWOOD SPACER. SEE 7/S5
H3	(2) 2x12	W/ (1) 1/2" PLYWOOD SPACER. SEE 7/S5
H4	(3) 2x8	W/ (2) 1/2" PLYWOOD SPACERS. SEE 7/S5
H5	(3) 2x10	W/ (2) 1/2" PLYWOOD SPACERS. SEE 7/S5
H6	(3) 2x12	W/ (2) 1/2" PLYWOOD SPACERS. SEE 7/S5
H7	(2) 1 3/4" x 11 1/4" LVL DROPPED BEAM	Fb=2850 PSI, E=2.0
H8	(3) 1 3/4" x 11 1/4" LVL DROPPED BEAM	Fb=2850 PSI, E=2.0
H9	(2) 1 3/4" x 14" LVL FLUSH BEAM. BOTTOM OF BEAM FLUSH WITH BOTTOM OF ROOF TRUSSES	Fb=2850 PSI, E=2.0. STRAP ENDS OF BEAM TO STUD GROUP BELOW W/ (2) H6 TIES. PROVIDE HIT4 HOLDDOWN AT STUD BASE.
H10	(2) 1 3/4" x 9 1/4" LVL DROPPED BEAM	Fb=2850 PSI, E=2.0
H11	(3) 1 3/4" x 9 1/4" LVL DROPPED BEAM	Fb=2850 PSI, E=2.0
H12	(3) 1 3/4" x 14" LVL DROPPED BEAM	Fb=2850 PSI, E=2.0
B1	W10x15 STEEL BEAM	
B2	W12x19 STEEL BEAM	
B3	W12x26 STEEL BEAM	
B4	W18x40 STEEL BEAM	
B5	W14x26 STEEL BEAM	

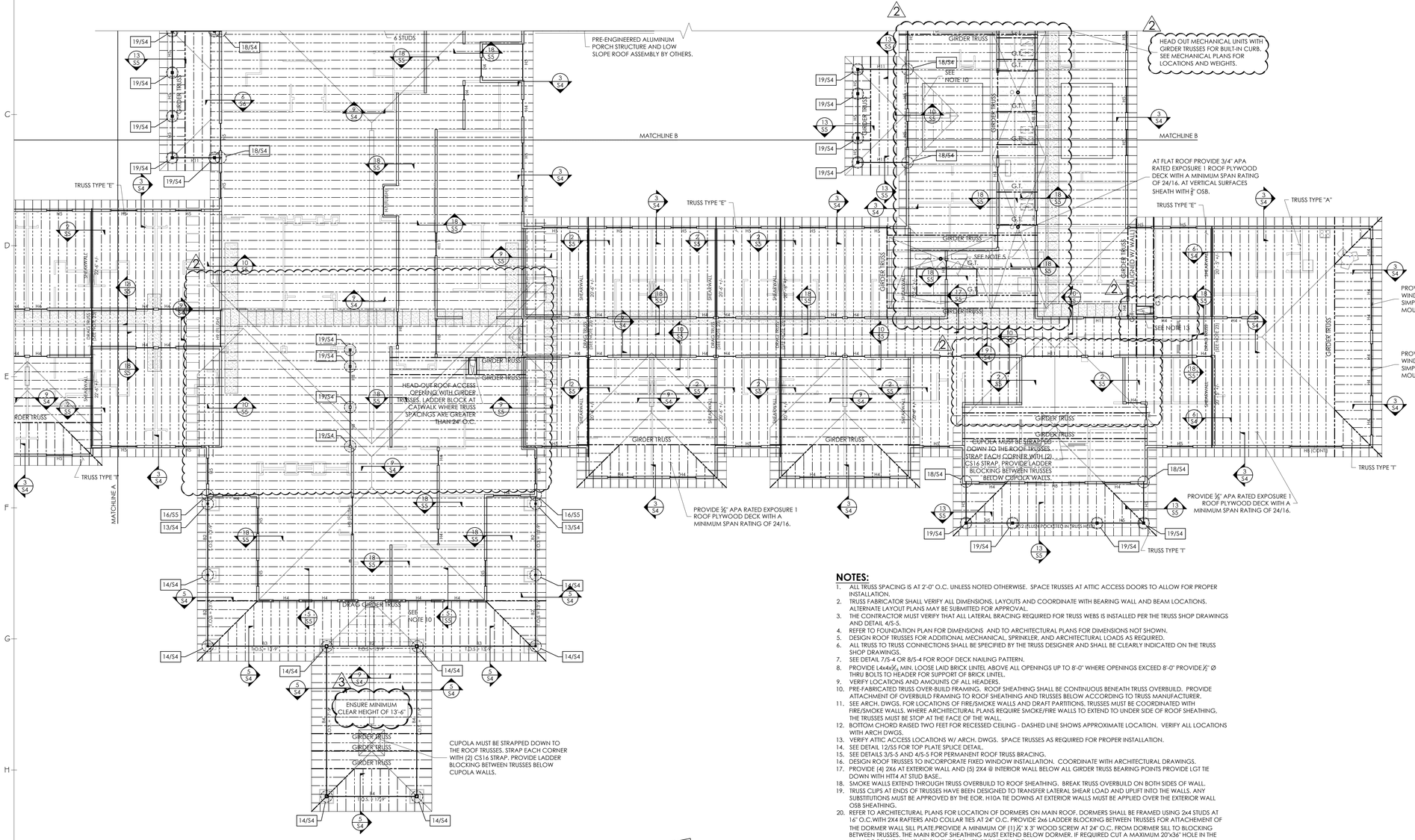

FRAMING PLAN

SCALE: 3/32"=1'-0"

"SHEARWALL" DESIGNATES INTERIOR 2X4 STUDS SHEATHED @ ONE FACE W/ MINIMUM 7/16" OSB. PROVIDE HORIZONTAL 2x BLOCKS AT ALL UNSUPPORTED JOINTS. EDGE NAIL WITH 8d COMMONS AT 4" O.C. AND FIELD NAIL WITH 8d COMMONS AT 12" O.C.

WRAP ALL EXTERIOR WALLS WITH MINIMUM 7/16" OSB. PROVIDE HORIZONTAL 2x BLOCKS AT ALL UNSUPPORTED JOINTS. EDGE NAIL WITH 8d COMMONS AT 4" O.C. AND FIELD NAIL WITH 8d COMMONS AT 12" O.C.

NOTES:

1. ALL TRUSS SPACING IS AT 2'-0" O.C. UNLESS NOTED OTHERWISE. SPACE TRUSSES AT ATTIC ACCESS DOORS TO ALLOW FOR PROPER INSTALLATION.
2. TRUSS FABRICATOR SHALL VERIFY ALL DIMENSIONS, LAYOUTS AND COORDINATE WITH BEARING WALL AND BEAM LOCATIONS. ALTERNATE LAYOUT PLANS MAY BE SUBMITTED FOR APPROVAL.
3. THE CONTRACTOR MUST VERIFY THAT ALL LATERAL BRACING REQUIRED FOR TRUSS WEBS IS INSTALLED PER THE TRUSS SHOP DRAWINGS AND DETAIL 4/S-5.
4. REFER TO FOUNDATION PLAN FOR DIMENSIONS AND TO ARCHITECTURAL PLANS FOR DIMENSIONS NOT SHOWN.
5. DESIGN ROOF TRUSSES FOR ADDITIONAL MECHANICAL, SPRINKLER, AND ARCHITECTURAL LOADS AS REQUIRED.
6. ALL TRUSS TO TRUSS CONNECTIONS SHALL BE SPECIFIED BY THE TRUSS DESIGNER AND SHALL BE CLEARLY INDICATED ON THE TRUSS SHOP DRAWINGS.
7. SEE DETAIL 7/S-4 OR 8/S-4 FOR ROOF DECK NAILING PATTERN.
8. PROVIDE L4x4x5/16 MIN. LOOSE LAID BRICK LINTEL ABOVE ALL OPENINGS UP TO 8'-0" WHERE OPENINGS EXCEED 8'-0" PROVIDE 1/2" Ø THRU BOLTS TO HEADER FOR SUPPORT OF BRICK LINTEL.
9. VERIFY LOCATIONS AND AMOUNTS OF ALL HEADERS.
10. PRE-FABRICATED TRUSS OVER-BUILD FRAMING. ROOF SHEATHING SHALL BE CONTINUOUS BENEATH TRUSS OVERBUILD. PROVIDE ATTACHMENT OF OVERBUILD FRAMING TO ROOF SHEATHING AND TRUSSES BELOW ACCORDING TO TRUSS MANUFACTURER.
11. SEE ARCH. DWGS. FOR LOCATIONS OF FIRE/SMOKE WALLS AND DRAFT PARTITIONS. TRUSSES MUST BE COORDINATED WITH FIRE/SMOKE WALLS. WHERE ARCHITECTURAL PLANS REQUIRE SMOKE/FIRE WALLS TO EXTEND TO UNDER SIDE OF ROOF SHEATHING, THE TRUSSES MUST BE STOP AT THE FACE OF THE WALL.
12. BOTTOM CHORD RAISED TWO FEET FOR RECESSED CEILING - DASHED LINE SHOWS APPROXIMATE LOCATION. VERIFY ALL LOCATIONS WITH ARCH DWGS.
13. VERIFY ATTIC ACCESS LOCATIONS W/ ARCH. DWGS. SPACE TRUSSES AS REQUIRED FOR PROPER INSTALLATION.
14. SEE DETAIL 12/S5 FOR TOP PLATE SPLICE DETAIL.
15. SEE DETAILS 3/S-5 AND 4/S-5 FOR PERMANENT ROOF TRUSS BRACING.
16. DESIGN ROOF TRUSSES TO INCORPORATE FIXED WINDOW INSTALLATION. COORDINATE WITH ARCHITECTURAL DRAWINGS.
17. PROVIDE (4) 2X6 AT EXTERIOR WALL AND (5) 2X4 @ INTERIOR WALL BELOW ALL GIRDER TRUSS BEARING POINTS PROVIDE LGT TIE DOWN WITH HIT4 AT STUD BASE.
18. SMOKE WALLS EXTEND THROUGH TRUSS OVERBUILD TO ROOF SHEATHING. BREAK TRUSS OVERBUILD ON BOTH SIDES OF WALL.
19. TRUSS CLIPS AT ENDS OF TRUSSES HAVE BEEN DESIGNED TO TRANSFER LATERAL SHEAR LOAD AND UPLIFT INTO THE WALLS. ANY SUBSTITUTIONS MUST BE APPROVED BY THE EOR. H10A TIE DOWNS AT EXTERIOR WALLS MUST BE APPLIED OVER THE EXTERIOR WALL OSB SHEATHING.
20. REFER TO ARCHITECTURAL PLANS FOR LOCATION OF DORMERS ON MAIN ROOF. DORMERS SHALL BE FRAMED USING 2x4 STUDS AT 16" O.C.WITH 2X4 RAFTERS AND COLLAR TIES AT 24" O.C. PROVIDE 2x6 LADDER BLOCKING BETWEEN TRUSSES FOR ATTACHEMENT OF THE DORMER WALL SILL PLATE.PROVIDE A MINIMUM OF (1)1/2" X 3" WOOD SCREW AT 24" O.C. FROM DORMER SILL TO BLOCKING BETWEEN TRUSSES. THE MAIN ROOF SHEATHING MUST EXTEND BELOW DORMER. IF REQUIRED CUT A MAXIMUM 20"x36" HOLE IN THE MAIN ROOF SHEATHING BELOW THE DORMER FOR VENTILATION.
21. COORDINATE WITH MP AND E DRAWINGS FOR THE ROOF TOP PLATFORM AND EXTERIOR LADDER LOCATION. SEE SHEET S7 FOR DETAILS.
22. BUILD CRIPPLE WALL FROM LOW ROOF SHEATHING TO BOTTOM OF CANOPY TRUSS. PROVIDE 2X6 LADDER BLOCKING AT 24" O.C. BETWEEN LOW ROOF TRUSSES UNDER CRIPPLE WALL. CONTRACTOR MUST PROVIDE CONTINUOUS UPLIFT CONNECTIONS.
23. ALIGN DRAG TRUSS WITH SHEAR WALL PER DETAIL 6/S4. DESIGN DRAG TRUSS TO TRANSFER 200 PLF LATERAL LOAD FROM TOP CHORD TO BOTTOM CHORD. LATERAL LOAD IS RESISTED BY SHEAR WALL BELOW.
24. PROVIDE DOUBLE DROPPED STRUCTURAL GABLE END TRUSS AT END OF PORCH ROOF. HANG SOFFIT FRAMING FROM BOTTOM CHORD OF TRUSSES. TRUSS DESIGNER TO DESIGN GABLE END TO SUPPORT AN ADDITIONAL 150 PLF DEAD LOAD AT THE BOTTOM CHORD.
25. SEE DETAIL 20 ON SHEET S4 FOR ROOF TOP CURB ATTACHMENTS.
26. TRUSS MANUFACTURER TO COORDINATE FIXED WINDOW OPENINGS IN GABLE END TRUSSES - SEE ARCH ELEVATIONS.

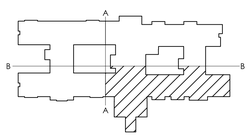

KEY PLAN

ARCHITECTURAL CONCEPTS INC
24-7 WEST EAT DRIVE, WHITE OAK LABOR PL 32091
EL: 904.503.0000 EMAIL: ACINC@ACINC.NET

HAUSER-CREECH INC.
PROJECT # 21-004-XXX

NORTH CAROLINA PROFESSIONAL SEAL
048492
10/7/22
ENGINEER
THEODORE A. DETTER
THEODORE A. DETTER
NORTH CAROLINA PE NO. 048492

HAUSER-CREECH, INC.
P. 919.817.7579
P. 919.817.7676
F. 919.404.2427
4506 PEARCES RD.
ZEBULON, NC
27597

TO THE BEST OF THE ENGINEER'S KNOWLEDGE, THE PLANS AND SPECIFICATIONS COMPLY WITH THE APPLICABLE MINIMUM BUILDING CODES AND THE APPLICABLE FIRE-SAFETY STANDARDS AS DETERMINED BY THE LOCAL AUTHORITY IN ACCORDANCE WITH THIS SECTION.

PROPOSED:

LEO BROWN GROUP

THE EMBASSY AT MOREHEAD CITY

A NEW SKILLED NURSING, MEMORY CARE, & ASSISTED LIVING FACILITY

3822 GALANTIS DRIVE
MOREHEAD CITY, NC 28557

PUBLICATION	DATE
CONCEPT:	XX-XX-XX
SCHEMATIC DESIGN:	07-16-21
PRELIMINARY DESIGN:	07-01-21
DESIGN DEVELOPMENT:	09-01-21
PERMIT SET:	03-25-22
BID SET:	10-15-21
FOR CONSTRUCTION:	XX-XX-XX

REVISIONS:

REV. #	DATE	REVISION TITLE
1	06-08-22	TOWN OF MOREHEAD CITY SITE PLAN REVISIONS
2	08-16-22	COORDINATION/VE CHANGES & NCDHHS COMMENTS
3	09-23-22	NCDOI-FIRE MARSHAL COMMENTS

PLOT DATE:

FILE LOCATION:

SHEET DESCRIPTION: 2

PARTIAL ROOF FRAMING PLAN

PROJECT NO.	SCALE:
1902	AS NOTED

DRAWING NO.

S2.2

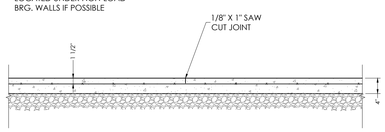

1 SLAB ON GRADE JOINTS
SCALE: NONE

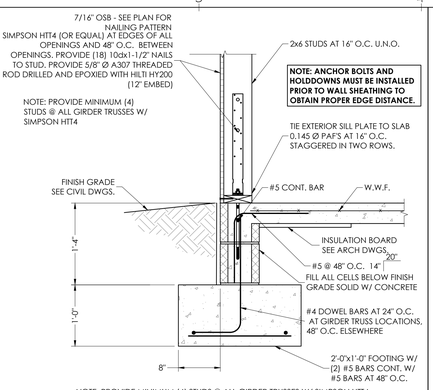

2 EXTERIOR WALL SECTION
SCALE: NONE

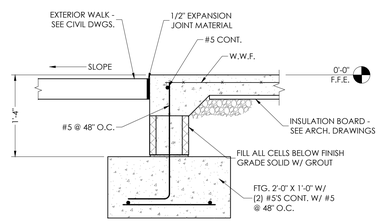

3 EXTERIOR DOOR SECTION
SCALE: NONE

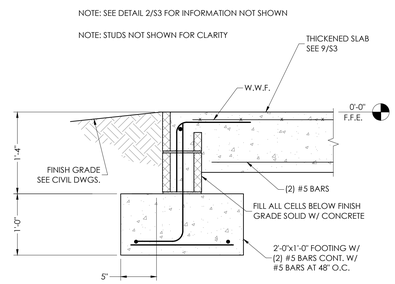

4 SECTION @ THICKENED SLAB
SCALE: NONE

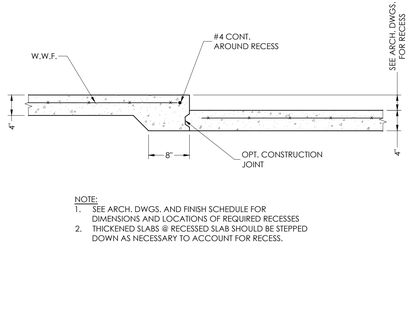

5 TYP. RECESSED SLAB
SCALE: NONE

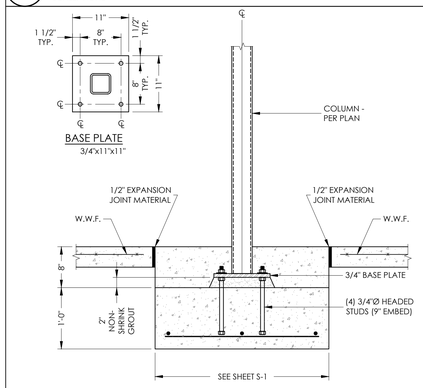

6 SECTION @ INTERIOR COLUMN
SCALE: NONE

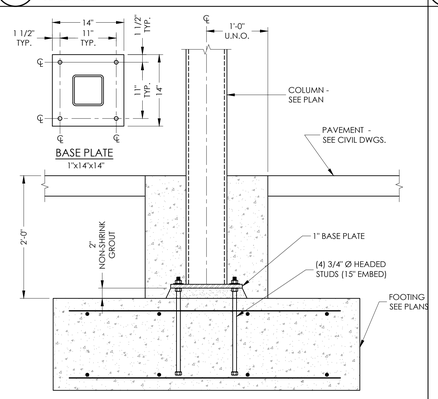

7 SECTION @ CANOPY COLUMN
SCALE: NONE

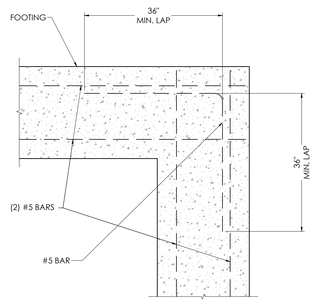

8 TYP. CONTINUITY CORNER
SCALE: NONE

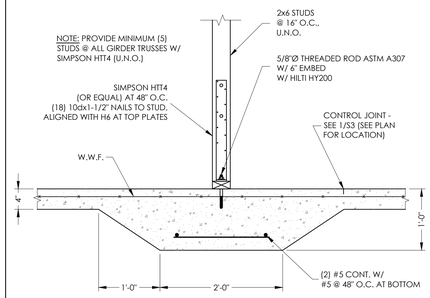

9 THICKENED SLAB
SCALE: NONE

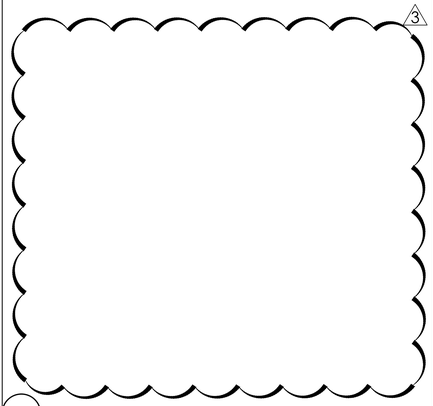

10
SCALE: NONE

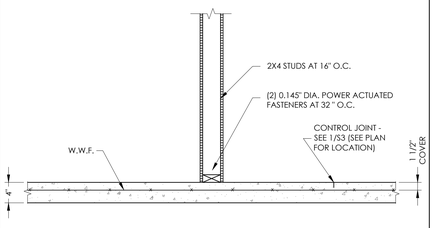

11 SECTION @ NON-LOAD BEARING STUDS
SCALE: NONE

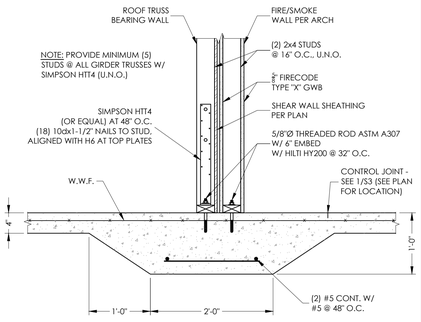

12 THICKENED SLAB AT FIRE/SMOKE WALL
SCALE: NONE

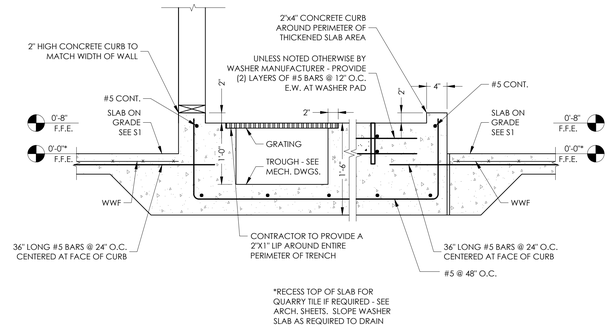

13 SECTION AT WASHER SLAB
SCALE: NONE

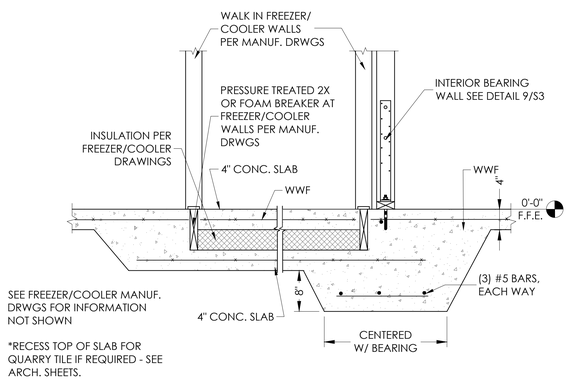

15 SECTION AT FREEZER/COOLER SLAB
SCALE: NONE

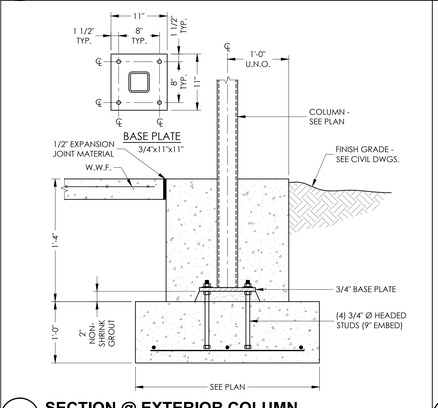

16 SECTION @ EXTERIOR COLUMN
SCALE: NONE

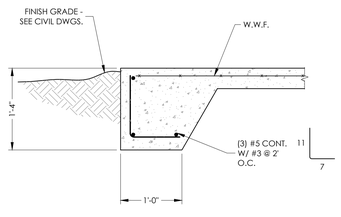

17 SECTION @ PORCH SLAB
SCALE: NONE

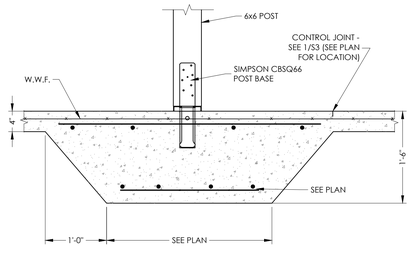

18 INTERIOR POST BASE DETAIL
SCALE: NONE

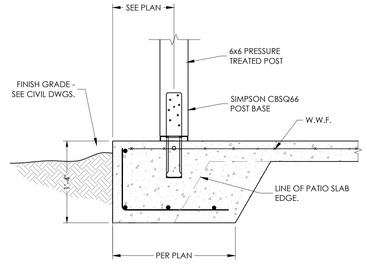

19 POST BASE DETAIL
SCALE: NONE

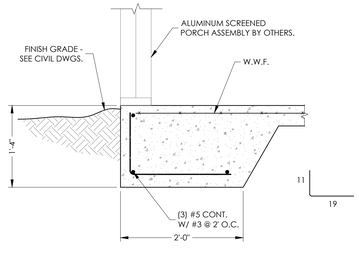

20
SCALE: NONE

ARCHITECTURAL CONCEPTS INC
24 T WEST TAY STREET, SUITE 3-3, LAKELAND, FL 33803
P: 863.687.8000 E: INFO@ACINC.NET

HAUSER-CREECH, INC.
PROJECT # 21-XXX-XXX

NORTH CAROLINA PROFESSIONAL ENGINEER SEAL
048492
10/7/22
THEODORE A. DETERS
THEODORE A. DETERS
NORTH CAROLINA PE NO. 048492

HC HAUSER CREECH
HAUSER-CREECH,INC.
P.919.817.7579
P.919.817.7676
F.919.404.2427
4506 PEARCES RD.
ZEBULON,NC
27597

TO THE BEST OF THE ENGINEER'S KNOWLEDGE, THE PLANS AND SPECIFICATIONS COMPLY WITH THE APPLICABLE MINIMUM BUILDING CODES AND THE APPLICABLE FIRE-SAFETY STANDARDS AS DETERMINED BY THE LOCAL AUTHORITY IN ACCORDANCE WITH THIS SECTION.

PROPOSED:

LEO BROWN GROUP

THE EMBASSY AT MOREHEAD CITY

A NEW SKILLED NURSING, MEMORY CARE, & ASSISTED LIVING FACILITY

3822 GALANTIS DRIVE
MOREHEAD CITY, NC 28557

PUBLICATION	DATE
CONCEPT:	XX-XX-XX
SCHEMATIC DESIGN:	07-16-21
PRELIMINARY DESIGN:	07-01-21
DESIGN DEVELOPMENT:	09-01-21
PERMIT SET:	03-25-22
BID SET:	10-15-21
FOR CONSTRUCTION:	XX-XX-XX

REVISIONS:

REV. #	DATE	REVISION TITLE
1	06-08-22	TOWN OF MOREHEAD CITY SITE PLAN REVISIONS
2	08-16-22	COORDINATION/VE CHANGES & NCDI1115 COMMENTS
3	09-23-22	NCDOI-FIRE MARSHAL COMMENTS

PLOT DATE:

FILE LOCATION:

SHEET DESCRIPTION: 2

STRUCTURAL DETAILS

PROJECT NO. 1902

SCALE: AS NOTED

DRAWING NO. S3

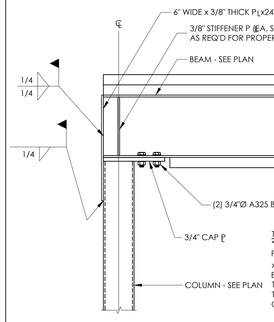

1 BEAM DETAIL @ COLUMN
SCALE: NONE

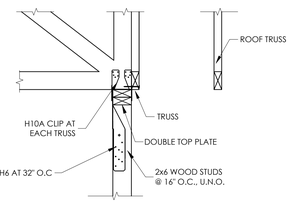

2 INTERIOR TRUSS BEARING
SCALE: NONE

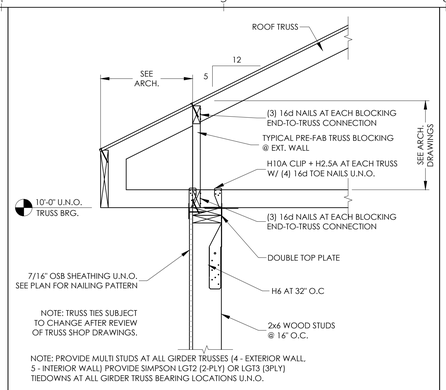

3 PREFAB. TRUSS @ EXT. WALL
SCALE: NONE

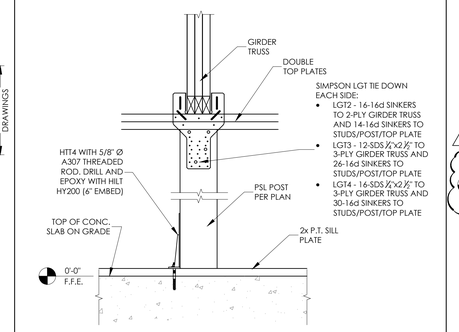

4 GIRDER TIE DOWN
SCALE: NONE

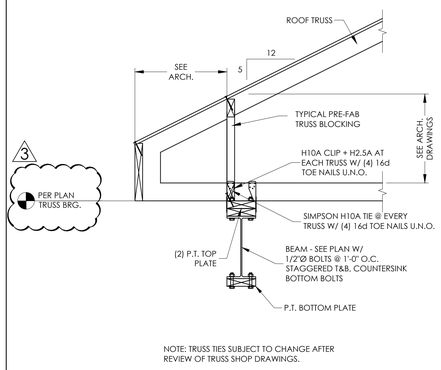

5 TRUSS BEARING @ BEAM
SCALE: NONE

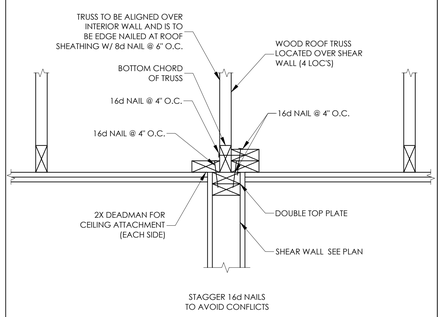

6 SHEARWALL AT DRAG TRUSS
SCALE: NONE

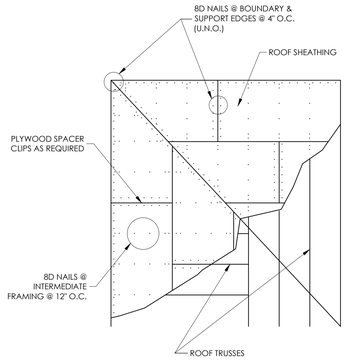

7 ROOF DECK NAILING PATTERN
SCALE: NONE

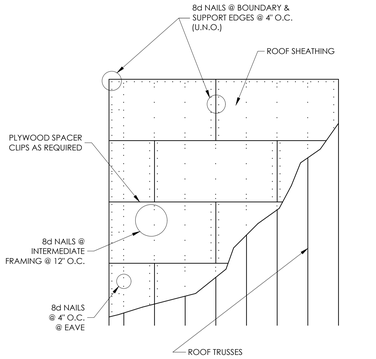

8 ROOF DECK NAILING PATTERN
SCALE: NONE

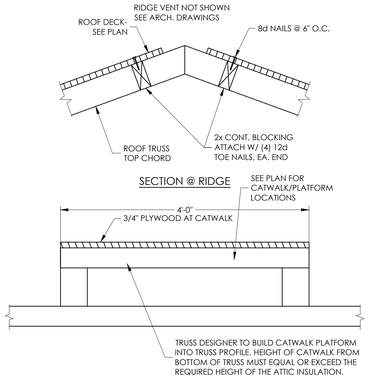

9 SECTION AT RIDGE AND CATWALK
SCALE: NONE

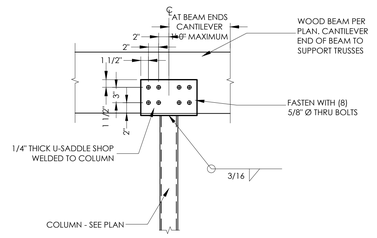

10 WOOD BEAM ON STEEL COLUMN
SCALE: NONE

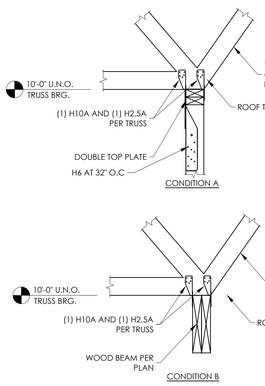

11 TRUSS @ INTERIOR BEAM BEARING
SCALE: NONE

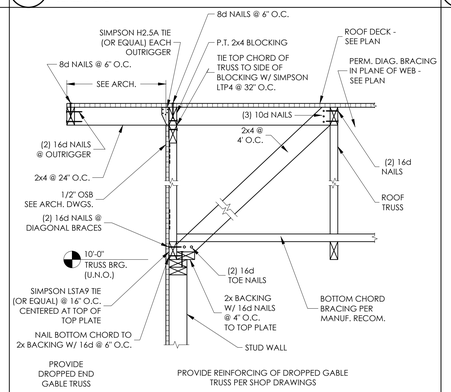

12 RAKE SECTION @ EXT. WALL
SCALE: NONE

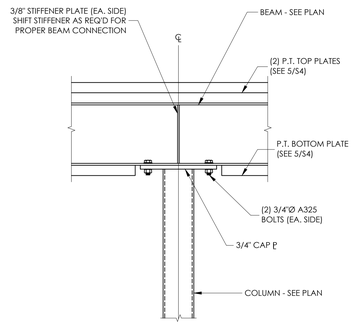

13 BEAM-TO-COLUMN CONNECTION
SCALE: NONE

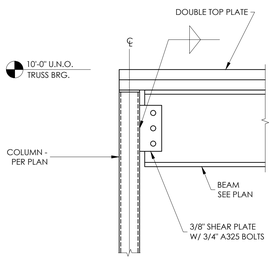

14 SHEAR CONNECTION
SCALE: NONE

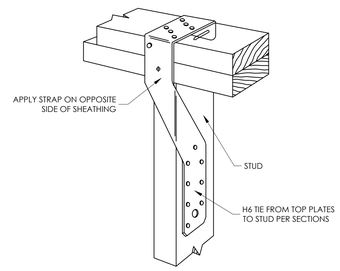

15 H6 TIE PERSPECTIVE
SCALE: NONE

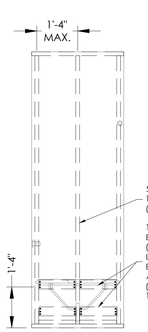

16 ELEVATION - SHOWER SEAT
SCALE: NONE

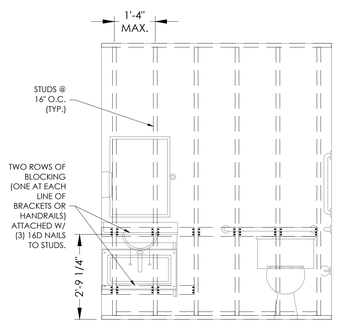

17 ELEVATION - TOILET AND SINK
SCALE: NONE

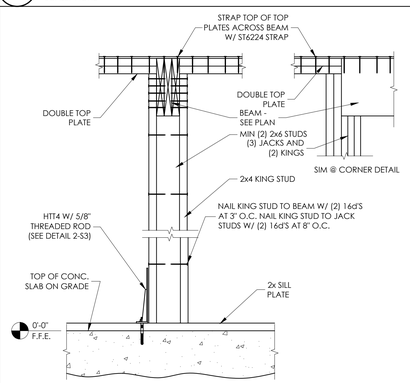

18 BEAM POCKET DETAIL
SCALE: NONE

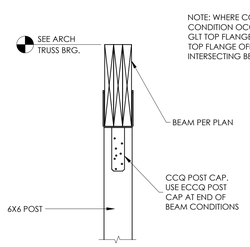

19 POST-BEAM CONNECTION
SCALE: NONE

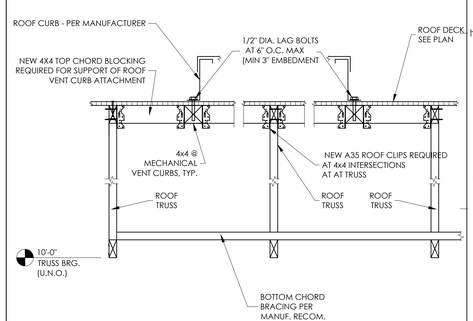

20 ROOFTOP MECHANICAL CURB
SCALE: NONE

ARCHITECTURAL CONCEPTS INC.
24 E WEST FAY AVE. PMB 133 LAKE FL 32778
P: 407.644.0111 E: ACINC@ACINC.NET

HAUSER-CREECH INC.
PROJECT # 21-0XX-0XX

NORTH CAROLINA PROFESSIONAL ENGINEER SEAL 048492 THEODORE A. DETERS 10/7/22
THEODORE A. DETERS
NORTH CAROLINA PE NO. 048492

hc HAUSER CREECH
HAUSER-CREECH, INC.
P. 919.817.7579
P: 919.817.7676
F. 919.404.2427
4506 PEARCES RD.
ZEBULON, NC 27597

TO THE BEST OF THE ENGINEER'S KNOWLEDGE, THE PLANS AND SPECIFICATIONS COMPLY WITH THE APPLICABLE MINIMUM BUILDING CODES AND THE APPLICABLE FIRE-SAFETY STANDARDS AS DETERMINED BY THE LOCAL AUTHORITY IN ACCORDANCE WITH THIS SECTION.

PROPOSED:

LEO BROWN GROUP

THE EMBASSY AT MOREHEAD CITY

A NEW SKILLED NURSING, MEMORY CARE, & ASSISTED LIVING FACILITY

3822 GALANTIS DRIVE
MOREHEAD CITY, NC 28557

PUBLICATION	DATE
CONCEPT:	XX-XX-XX
SCHEMATIC DESIGN:	07-16-21
PRELIMINARY DESIGN:	07-01-21
DESIGN DEVELOPMENT:	09-01-21
PERMIT SET:	03-25-22
BID SET:	10-15-21
FOR CONSTRUCTION:	XX-XX-XX

REVISIONS:

REV. #	DATE	REVISION TITLE
1	06-08-22	TOWN OF MOREHEAD CITY SITE PLAN REVISIONS
2	08-16-22	COORDINATION/VE CHANGES & NCDMHS COMMENTS
3	09-23-22	NCDOI-FIRE MARSHAL COMMENTS

PLOT DATE:

FILE LOCATION:

SHEET DESCRIPTION: 2

STRUCTURAL DETAILS

PROJECT NO. 1902

SCALE: AS NOTED

DRAWING NO. S4

3

STRUCTURAL DESIGN DATA SHEET (ASCE 7-10):

RISK CATEGORY III (ASCE 7-10)

OCCUPANCY CLASSIFICATION INSTITUTIONAL GROUP I-2 (2015 IBC)

IMPORTANCE FACTORS:
I seismic 1.25 (1.0 for Storage Building)
I snow 1.10 (1.0 for Storage Building)

LIVE LOADS:
RO/OF 20 psf
CATWALK 40 psf
FLOOR 100 psf

SNOW LOAD:
Pg 10 psf

WIND LOAD:
Basic Wind Speed 151 MPH
Exposure Category C
Wind Base Shear (MWFRS)
Vx 132.6 K
Vy 153.6 K

SEISMIC LOAD:
Spectral Response (ECS Southeast, LLP Project #22:30006, dated March, 1, 2021)
Ss 0.119
S1 0.060
Sds 0.127
Sd1 0.096
Seismic Design Category B
Seismic Site Class D
Fundamental Period, Ta 0.174 sec < 0.500 sec, therefore Seismic Site Class D is allowed.
Structural System Light framed walls sheathed w/ structural panels
R-Factor 6.5
Analysis Procedure Equivalent Lateral Force
Seismic Base Shear
Vx 28.2 K
Vy 28.2 K

SEISMIC ANCHORAGE OF NON-STRUCTURAL COMPONENTS:
Per ASCE 7 Chapter 13 all non-structural components are exempt.

LATERAL DESIGN CONTROL:
X-Direction Wind
Y-Direction Wind

SOIL BEARING PROPERTIES:
Allowable Bearing Capacity 1500 psf (ECS Southeast, LLP Project #22:30006, dated March, 1, 2021)

STATEMENT OF SPECIAL INSPECTIONS:

Project Name: Embassy at Morehead City
Building Permit Number:

Project Address: 3822 Galantis Drive, Morehead City, NC 28557

The following information is being submitted in accordance with the Special Inspection provisions of the International Building Code. Attached is the Schedule of Special Inspections (SSI) required for this project.

The Special Inspection program outlined herein does not relieve the Contractor or any other entity of contractual duties, including quality control, quality assurance or safety. The contractor is soley responsible for construction means, methods and job site safety.

Respectfully submitted,
The Structural Engineer of Record

Signature: Theodore A. Deters Date: 10/7/22

3

2018 APPENDIX B
BUILDING CODE SUMMARY FOR ALL COMMERCIAL PROJECTS
STRUCTURAL DESIGN
(PROVIDE ON THE STRUCTURAL SHEETS IF APPLICABLE)

DESIGN LOADS:

Importance Factors: Snow (I_S) 1.10; Seismic (I_E) 1.25

Live Loads: Roof 20 psf; Mezzanine 40 psf; Floor 100 psf

Ground Snow Load: 10 psf

Wind Load: Ultimate Wind Speed 151 mph (ASCE-7); Exposure Category C

SEISMIC DESIGN CATEGORY: ☐ A ☒ B ☐ C ☐ D

Provide the following Seismic Design Parameters:
Risk Category (Table 1604.5) ☐ I ☐ II ☒ III ☐ IV
Spectral Response Acceleration S_S 11.9 %g S_1 6.0 %g
Site Classification (ASCE 7) ☐ A ☐ B ☐ C ☒ D ☐ E ☐ F
Data Source: ☐ Field Test ☐ Presumptive ☒ Historical Data
Basic structural system ☒ Bearing Wall ☐ Dual w/Special Moment Frame ☐ Building Frame ☐ Dual w/Intermediate R/C or Special Steel ☐ Moment Frame ☐ Inverted Pendulum ☐ Simplified
Analysis Procedure: ☒ Equivalent Lateral Force ☐ Dynamic
Architectural, Mechanical, Components anchored? ☐ Yes ☒ No

LATERAL DESIGN CONTROL: Earthquake ☐ Wind ☒

SOIL BEARING CAPACITIES:
Field Test (provide copy of test report) 1,500 psf
Presumptive Bearing capacity N/A psf
Pile size, type, and capacity N/A

2018 NC Administrative Code and Policies **Appendix B for Building**

DESIGN INFORMATION:

1. ALL CONSTRUCTION SHALL CONFORM TO THE 2018 NORTH CAROLINA BUILDING CODE, 2015 INTERNATIONAL BUILDING CODE AND ASCE 7-10.
2. DESIGN LOADS:
   DEAD AND LIVE LOADS
   ROOF LOADS
   TOP CHORD DEAD 15 psf
   BOTTOM CHORD DEAD 5 psf
   TOP CHORD LIVE 20 psf
   BOTTOM CHORD LIVE 10 psf (WITHOUT ATTIC STORAGE)
   CATWALK 40 psf
   FLOOR LOADS
   TOP CHORD DEAD N/A
   BOTTOM CHORD DEAD N/A
   TOP CHORD LIVE N/A
   BOTTOM CHORD LIVE N/A
   RISK CATEGORY III
   IMPORTANCE FACTORS
   I seismic 1.25
   I snow 1.10
   GROUND SNOW LOAD (pg) 0 psf
   DESIGN WIND SPEED 151 mph
   SEISMIC DESIGN PARAMETERS
   S_1 6.0 %g
   S_S 11.7 %g
   SITE CLASS D
   Sds 0.127
   Sd1 0.096
   SEISMIC DESIGN CATEGORY B
   R 6.5
   Cv 0.0244
3. ADDITIONAL LIVE LOADS PRESCRIBED IN ASCE7-10 RELATED TO ROOF ATTICS AND ROOF TRUSSES, INCLUDING LIMITED ACCESS STORAGE IN ATTICS SHALL APPLY TO PRE-FABRICATED TRUSSES, AND SHALL BE CLEARLY IDENTIFIED ON THE TRUSS SHOP DRAWINGS..
4. THE DESIGN ADEQUACY AND SAFETY OF ERECTION BRACING, SHORING, TEMPORARY SUPPORTS, ETC. IS THE SOLE RESPONSIBILITY OF THE CONTRACTOR.
5. FOR LOCATION OF MISCELLANEOUS ITEMS (SUCH AS INSERTS, ETC.) AFFECTING STRUCTURAL WORK, SEE ARCHITECTURAL, MECHANICAL, PLUMBING AND ELECTRICAL DRAWINGS.
6. THIS PROJECT CONTAINS A SERIES OF DETAILS CONSIDERED "TYPICAL DETAILS". THESE SHALL APPLY AT ALL SITUATIONS THAT ARE THE SAME OR SIMILAR AS THESE DETAILS. THESE "TYPICAL DETAILS" SHALL APPLY WHETHER OR NOT THEY ARE INDICATED OR CUT AT EACH LOCATION.
7. VERIFY EXISTING CONDITIONS AND NOTIFY ARCHITECT AND ENGINEER OF ANY CONDITIONS WHICH DO NOT COMPLY WITH PLANS AND SPECIFICATIONS. STRUCTURAL DRAWINGS MUST BE WORKED WITH ARCHITECTURAL DRAWINGS.
8. USE OF STRUCTURAL DRAWINGS FOR SHOP DRAWINGS IS NOT PERMITTED. THE CONTRACTOR SHALL REVIEW AND STAMP DRAWINGS ACCORDINGLY PRIOR TO SUBMITTING TO THE ENGINEER. THE OMISSION OF ITEMS FROM SHOP DRAWINGS SHALL NOT RELIEVE CONTRACTOR OF RESPONSIBILITY OF FURNISHING AND INSTALLING ITEMS REGARDLESS OF WHETHER SHOP DRAWINGS HAVE BEEN REVIEWED AND APPROVED.

WOOD FRAMING (NOT INCLUDING PRE-FABRICATED TRUSSES):

1. ALL WOOD CONSTRUCTION SHALL CONFORM TO THE FLORIDA BUILDING CODE AND TO THE NDS.
2. ALL NAILING (UNLESS NOTED OTHERWISE) SHALL CONFORM TO THE NORTH CAROLINA BUILDING CODE.
3. ALL STUDS, TOP PLATES AND SILL PLATES IN BEARING WALLS AND SHEARWALLS SHALL BE SPF NO. 2 OR BETTER.
4. ALL STUDS, TOP PLATES AND SILL PLATES IN NON-BEARING WALLS SHALL BE SPF NO. 3 OR BETTER.
5. ALL 2x NOMINAL HEADERS SHALL BE SPF NO. 2 OR BETTER OR SYP NO. 2 OR BETTER.
6. ALL EXPOSED LUMBER SHALL BE PRESERVATIVE TREATED.
7. FINGER JOINTED STUDS MAY BE USED IN INTERIOR APPLICATIONS PROVIDED THE STRUCTURAL PROPERTIES EQUAL OR EXCEED THAT OF THE SOLID SAWN LUMBER. FINGER JOINTED LUMBER SHALL NOT BE USED IN EXPOSED CONDITIONS.
8. ALL CONNECTIONS IN EXPOSED LUMBER SHALL BE HOT DIPPED GALVANIZED OR STAINLESS STEEL.
9. ALL LUMBER IN CONTACT WITH CONCRETE SHALL BE PRESERVATIVE TREATED.
10. ALL MANUFACTURED LAMINATED VENEER LUMBER (LVL) SHALL HAVE A MODULUS OF ELASTICITY OF 2E6 psi AND A MINIMUM BENDING STRENGTH OF 2800 psi.
11. UNDER NO CIRCUMSTANCE SHALL LAMINATED VENEER LUMBER BE USED IN AN EXPOSED CONDITION. WHERE MANUFACTURER LUMBER IS REQUIRED IN AN EXPOSED CONDITION THE CONTRACTOR MUST USED PRESERVATIVE TREATED GLU-LAMINATED LUMBER (GLB).
12. ALL GLU-LAMINATED LUMBER SHALL BE GRADED ACCORDING TO THE PLANS. IF NO GRADE IS SPECIFIED A MINIMUM GADE OF 4V F2400 SHALL BE USED.

FOUNDATION NOTES:

1. FOUNDATION DESIGN IS BASED UPON THE GEOTECHNICAL REPORT BY ECS SOUTHEAST, LLP PROJECT #22:30006, DATED MARCH 1, 2021. CONTRACTOR/OWNER SHALL VERIFY PRIOR TO CONSTRUCTION. FOOTINGS ARE DESIGNED TO BEAR ON UNIFORM SUITABLE SOIL CAPABLE OF SUPPORTING 1500 PSF.

*IT IS THE RESPONSIBILITY OF THE CONTRACTOR TO FOLLOW RECOMMENDATIONS BY A LICENSED GEOTECHNICAL ENGINEER TO ACHIEVE 1500 PSF AND LESS THAN 1" ANTICIPATED SETTLEMENT.

2. THE SOIL BEARING CAPACITY AND CONSISTENCY SHALL BE VERIFIED FOR THE BUILDING LIMITS BY A REGISTERED GEO-TECHNICAL ENGINEER WHEN FOUNDATION EXCAVATIONS HAVE BEEN CARRIED DOWN TO THE PROPOSED ELEVATIONS. THE BOTTOM OF ALL EXTERIOR FOOTINGS SHALL BE A 2'-4" MINIMUM BELOW FINISHED SLAB. (U.N.O.)
4. WHERE FOOTING EXCAVATIONS ARE TO REMAIN OPEN AND MAY BE EXPOSED TO RAINFALL, THE EXCAVATIONS SHALL BE UNDERCUT AND A 3" THICK MUD MAT OF 2000 PSI CONCRETE SHALL BE PLACED OR CLEAN GRAVEL SHALL BE PLACED IN THE BOTTOM TO PROTECT THE BEARING SOILS.
5. WHERE FOOTING STEPS ARE NECESSARY, THEY SHALL BE NO STEEPER THAN 1 VERTICAL TO 2 HORIZONTAL, UNLESS SHOWN OTHERWISE ON PLANS.
6. IT IS THE CONTRACTOR'S SOLE RESPONSIBILITY FOR PREPARING THE BUILDING PAD PER THE GEOTECHNICAL ENGINEER OF RECORD'S RECOMMENDATIONS.

CONCRETE MASONRY:

1. CONCRETE MASONRY SHALL CONFORM TO THE NATIONAL CONCRETE MASONRY ASSOCIATION SPECIFICATIONS, AND HAVE A DENSITY OF125 P.C.F. AND SHALL HAVE A MINIMUM PRISM STRENGTH (F'm) OF 1500 P.S.I.
2. GROUT FOR FILLING CONCRETE MASONRY CELLS SHALL CONFORM TO STANDARD SPECIFICATIONS FOR "GROUT FOR MASONARY", ASTM C-476-02, AND SHALL HAVE A COMPRESSIVE PRISM STRENGTH (F'm) OF 3000 P.S.I. AT 28 DAYS, THE SLUMP SHALL BE BETWEEN 9" AND 11". WHERE THE MINIMUM DIMENSION OF ANY CONTINUOUS VERTICAL CELL IS 3" OR LESS, USE FINE GROUT, OTHERWISE USE COARSE (PEA GRAVEL) GROUT.
3. MORTAR FOR CONCRETE MASONRY SHALL BE TYPE "S" AND SHALL CONFORM TO ASTM C-270-04. 4. GROUT PROCEDURES AND REBAR INSTALLATION SHALL PER ASTM ACI 530 1-99. PROVIDE 36" LAP SPLICES IN REBAR IN 12" CMU FIRE WALL.

3

SCHEDULE OF SPECIAL INSPECTIONS:

Project Name: Embassy at Morehead City

Construction divisions which require inspections for this project are as follows:

INSPECTION TASK	CONTINUOUS (C) OR PERIODIC (P) INSPECTIONS C	P	SPECIAL INSPECTIONS FIRM	NOTES & SCOPE
1. VERIFICATION OF SOILS (Table 1705.6)				
Verify materials below shallow Foundations are adequate to achieve the design bearing capacity.		P	Testing Agency (TA)	Testing Agency shall provide soils report
Verify excavations are extended to proper depth.		P	Testing Agency (TA)	
Perform Classification and testing of compacted fill materials.		P	Testing Agency (TA)	
Verify use of proper materials, densities and lift thickness during placement and compaction of compacted fill.	C		Testing Agency (TA)	
Prior to placement of compacted fill, observe sub-grade and verify that site has been prepared properly.		P	Testing Agency (TA)	
2. REINFORCED CONCRETE (Table 1705.3)				
Inspection of reinforcing steel, including prestressing tendons, and placement. ACI 318:3.5, 7.1-7.7		P	Testing Agency (TA)	ACI 318: 3.5,7.1-7.7 IBC: 1913.4
Verifying use of required design mix: ACI 318: Ch. 4, 5.2-5.4		P	Testing Agency (TA)	ACI 318: Ch. 4, 5.2-5.4 IBC: 1904.2.2, 1913.2, 1913.3
At the time fresh concrete is sampled to fabricate specimens for strength tests, slump, air content, and temperature of concrete.	C		Testing Agency (TA)	ASTM C 172, C 31 ACI: 318: 5.6, 5.8 IBC: 1913.10
3. STRUCTURAL WOOD (1705.11.1)				
Inspect OSB nailing patterns per structural plans. Inspect roof truss and top plate ties, holddowns, and anchorage per structural plans		P	Special Inspector (SI)	

SCHEDULE OF SPECIAL INSPECTIONS (Continued):

Project Name: Embassy at Morehead City

Construction divisions which require inspections for this project are as follows:

INSPECTION TASK	CONTINUOUS (C) OR PERIODIC (P) INSPECTIONS C	P	SPECIAL INSPECTIONS FIRM	NOTES & SCOPE
4. STRUCTURAL STEEL (1705.2)				
Material verification of high strength bolts, nuts and washers.		P	Special Inspector (SI)	AISC 360, A3.3
Inspection of high strength bolting, snug tight joints		P	Special Inspector (SI)	AISC 360, M2.5 IBC 1704.3.3
Material verification of structural steel.		P	Special Inspector (SI)	Fabricator's bill of materials verification is acceptable.
All field welding.		P	Special Inspector (SI)	AWS D1.1 IBC 1704.3.1
5. MASONRY (1705.4)				
As masonry construction begins, the following shall be verified to ensure compliance: (A) Proportions of site mixed mortar, (B) Construction of mortar joints, (C) Location of reinforcement and connectors.		P	Testing Agency (TA)	ACI 318: 3.5,7.1-7.7 IBC: 1913.4
The inspection program shall verify: (A) Size and location of structural elements, (B) Size, grade, type of reinforcement, (C) Protection of masonry during cold weather (temperature below 40 degrees F) or hot weather (temperature above 90 degrees F)		P	Testing Agency (TA)	Sec. 2108.9.2.11, Item 2, Sec. 2104.3, 2104.4, ACI Sec. 1.15.4, 2.1.2, Sec. 1.12, Sec 2.1.8.6, 2.1.8.6.2, ACI 3.3G, Art 2.4.3.4, Art 1.8
Prior to grouting, the following shall be verified to ensure compliance: (A) Grout space is clean, (B) Placement of reinforcement and connectors, (C) Proportions of site-prepared grout, (D) Construction of mortar joints		P	Testing Agency (TA)	Sec. 1.12, Art. 3.2D, Art 3.4, Art. 2.6B, Art. 3.3B
Grout Placement shall be verified to ensure compliance with code and construction provisions.		P	Testing Agency (TA)	Art. 3.5

STRUCTURAL STEEL:

1. ALL STRUCTURAL STEEL WORK SHALL CONFORM TO THE A.I.S.C. "STEEL CONSTRUCTION MANUAL" 360-10.
2. STRUCTURAL STEEL SHALL BE ASTM A-992.
3. STRUCTURAL TUBES SHALL BE ASTM A500, GRADE B.
4. STEEL FRAMING CONNECTIONS SHALL BE BOLTED OR WELDED. BOLTS SHALL BE 3/4" DIAMETER MINIMUM AND SHALL BE ASTM A-325-N U.N.O., SNUG TIGHT ALL CONNECTIONS.
5. ANCHOR BOLTS SHALL BE ASTM F1554 HEADED BOLTS. MINIMUM ANCHOR BOLT EMBEDMENT LENGTH SHALL BE 12 BOLT DIAMETERS U.N.O. CLEAN ANCHOR BOLTS OF ALL GREASE, DIRT, ETC., BEFORE INSTALLATION.
6. WELDS SHOWN ON THE STRUCTURAL DRAWINGS ARE THE MINIMUM REQ'D BY DESIGN. THE FABRICATOR'S DRAWINGS SHALL SHOW WELDS AND THEY SHALL CONFORM TO A.W.S. SPECIFICATIONS. ALL WELDING SHALL BE DONE WITH E-70 SERIES ELECTRODES.
7. PAINT ALL STRUCTURAL STEEL WITH ONE COAT OF RED OXIDE RUST-INHIBITIVE PRIMER 2.5 MILS IN THICKNESS. THE COMPATABILITY OF PRIMER AND ANY TOP COAT SHALL BE VERIFIED BEFORE ANY PAINTING IS PERFORMED. TOUCH-UP ALL EXPOSED METAL AFTER FIELD INSTALLATION. ALL STRUCTURAL STEEL WHICH IS EXPOSED TO THE ELEMENTS SHALL RECEIVE TWO COATS OF EXTERIOR ENAMEL WHICH IS COMPATIBLE TO THE PRIMED SURFACE.
8. THE SHOP DRAWINGS SHALL INCLUDE COMPLETE DETAILS AND SCHEDULES FOR FABRICATION AND ASSEMBLY OF STRUCTURAL STEEL MEMBERS. SUBMIT FOUR PRINTS OF EACH DRAWING. REPRODUCTION OF STRUCTURAL DRAWINGS FOR SHOP DRAWINGS IS NOT PERMITTED. CONTRACTOR TO REVIEW AND STAMP DRAWINGS PRIOR TO SUBMISSION TO THE EOR.

WOOD TRUSSES:

1. ROOF TRUSSES SHALL BE DESIGNED TO SUPPORT THE DESIGN LOADS INDICATED IN THE DESIGN INFORMATION SECTION.
2. IN ADDITION TO THE UNIFORM LOADING SPECIFIED FOR TRUSS DESIGN, THE TRUSS SUPPLIER SHALL INCLUDE ANY CONCENTRATED LOADS CAUSED BY ARCHITECTURAL FEATURES OR M, P&E EQUIPMENT OR MATERIALS AND BY SPRINKLER LOADS IN THE TRUSS DESIGN.
3. TRUSSES SHALL BE DESIGNED BY A REGISTERED ENGINEER IN THE STATE OF NORTH CAROLINA AND SHOP DRAWINGS BEARING THE ENGINEER'S SEAL SHALL BE SUBMITTED FOR APPROVAL.
4. TRUSSES SHALL BE DESIGNED, FABRICATED AND ERECTED IN ACCORDANCE WITH APPLICABLE STANDARDS OF THE TRUSS PLATE INSTITUTE TPI 1-2002.
5. LIMIT LL DEFLECTION TO L/360. LIMIT TL DEFLECTION TO L/240 OR 1.25" MAX.

REINFORCED CONCRETE:

1. ALL CONCRETE WORK SHALL CONFORM TO THE "BUILDING CODE REQUIREMENTS FOR REINFORCED CONCRETE," (ACI 318, 14)
2. REINFORCING STEEL SHALL BE DEFORMED BARS ASTM A-615 (GRADE 60)
3. THE COMPRESSIVE STRENGTH AT 28 DAYS OF ALL CAST IN PLACE CONCRETE SHALL BE 3000 P.S.I. (SEE CIVIL DRAWINGS FOR SITE CONCRETE) KEEP COPY OF CONC. TEST REPORTS ON SITE AT ALL TIMES.
4. LAP SPLICES FOR #5 REINFORCING BARS SHALL BE 24" MIN., U.N.O.
5. CLEAR CONCRETE COVER FOR REINFORCING STEEL:
   MASONRY WALLS: LOCATE IN CENTER OF WALL (U.N.O.)
   FOOTINGS: 2" FORMED EDGES
   3" CAST AGAINST GROUND
   SLAB ON GRADE: MID-HEIGHT OF SLAB
6. THE LONGITUDINAL REINFORCING STEEL IN WALLS AND FOOTINGS SHALL BE CONTINUOUS AROUND CORNERS. SEE TYPICAL DETAILS.
7. ALL CONCRETE SHALL BE VIBRATED BY MECHANICAL VIBRATORS.

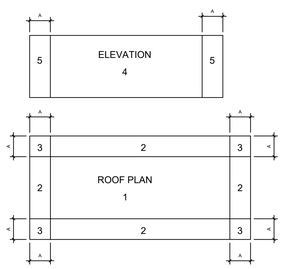

WIND LOAD SCHEDULE					
COMPONENTS & CLADDING	ROOF WIND LOAD			WALL WIND LOADS	
	ROOF AREA			WALL AREA	
	1	2	3	4	5
PRESSURE (PSF)	+20.9	+20.9	+20.9	+50.6	+50.6
SUCTION (PSF)	-42.7	-60.2	-95.0	-54.9	-67.1

1. CORNER DISTANCE, A=5 FEET, ROOF = 100 SF, WALL = 13 S.F. C&C
2. VALUES ARE NOT FACTORED. ASD LOAD FACTOR IS 0.6 FOR WIND.
3. DP FOR WINDOW AND DOOR CAN CONSERVATIVELY USE NEGATIVE PRESSURES AT WALL AREA 5.

ARCHITECTURAL CONCEPTS INC
24 T WEST TAY DRIVE, UNITE 103 LAKELY FL 33813
BUSINESS@ARCHITECTURALCONCEPTS.COM

HAUSER-CREECH INC.
PROJECT # 21-XXX-XXX

NORTH CAROLINA PROFESSIONAL ENGINEER SEAL 048492 10/7/22 THEODORE A. DETERS
THEODORE A. DETERS
NORTH CAROLINA PE NO. 048492

HAUSER-CREECH, INC.
P. 919.817.7579
P. 919.817.7676
F. 919.404.2427
4506 PEARCES RD.
ZEBULON, NC 27597

TO THE BEST OF THE ENGINEER'S KNOWLEDGE, THE PLANS AND SPECIFICATIONS COMPLY WITH THE APPLICABLE MINIMUM BUILDING CODES AND THE APPLICABLE FIRE–SAFETY STANDARDS AS DETERMINED BY THE LOCAL AUTHORITY IN ACCORDANCE WITH THIS SECTION.

PROPOSED:

LEO BROWN GROUP

THE EMBASSY AT MOREHEAD CITY

A NEW SKILLED NURSING, MEMORY CARE, & ASSISTED LIVING FACILITY

3822 GALANTIS DRIVE
MOREHEAD CITY, NC 28557

PUBLICATION	DATE
CONCEPT:	XX-XX-XX
SCHEMATIC DESIGN:	07-16-21
PRELIMINARY DESIGN:	07-01-21
DESIGN DEVELOPMENT:	09-01-21
PERMIT SET:	03-25-22
BID SET:	10-15-21
FOR CONSTRUCTION:	XX-XX-XX

REVISIONS:

REV. #	DATE	REVISION TITLE
1	06-08-22	TOWN OF MOREHEAD CITY SITE PLAN REVISIONS
2	08-16-22	COORDINATION/VE CHANGES & NCDHHS COMMENTS
3	09-23-22	NCDOI-FIRE MARSHAL COMMENTS

PLOT DATE:

FILE LOCATION:

SHEET DESCRIPTION: 2

STRUCTURAL NOTES AND DESIGN DATA

PROJECT NO. 1902 | SCALE: AS NOTED

DRAWING NO. SN1